UNIVERSITY OF KASDI MERBAH OUARGLA
Faculty of New Technologies of Information and Communication
Department of Electronics and Telecommunications

Master's Thesis

Submitted in fulfillment of the requirements for the Master's degree in Electronics of Embedded Systems.

Design and Implementation of an Embedded Smart Monitoring and Risk Protection System for Electricity Meters

BY

Kouidri Mohammed Laid

Publicly defended on: 14/06/2026

In front of the jury members of:

Dr. TIDJANI Zakaria	President	UKMO
Dr. Saggai Abdel Mowla	Examinator	UKMO
Dr. TIDJANI Sayhia	Supervisor	UKMO

Academic year: 2025/2026

شكر و عرفان

بسم الله الرحمن الرحيم

قال الله تعالى: ﴿وَقُلِ اعْمَلُوا فَسَيَرَى اللَّهُ عَمَلَكُمْ وَرَسُولُهُ وَالْمُؤْمِنُونَ﴾.

الحمد لله الذي بنعمته تتم الصالحات، والذي وفقنا لإتمام هذا العمل المتواضع، والصلاة والسلام على سيدنا محمد صلى الله عليه وسلم، وعلى آله وصحبه أجمعين.

نتقدم بأسمى عبارات الشكر والتقدير والعرفان إلى الله عز وجل الذي منحنا الصحة والعزيمة وأعاننا على إنجاز هذا العمل.

كما نتقدم بجزيل الشكر والامتنان إلى الأستاذ المشرف الأستاذة الدكتورة **التجاني سائحية** على هذه المذكرة، لما قدمته لي من توجيهات قيمة ونصائح علمية ومتابعة وصبرها ودعمها المستمر طوال انجاز هذا المشروع كان لها الأثر الكبير في شحد همتي واصراري على المواصلة.

ونتوجه بخالص الشكر والتقدير إلى أعضاء لجنة المناقشة الموقرين على تفضلهم بقبول مناقشة هذا العمل، وعلى ما سيقدمونه من ملاحظات وتوجيهات علمية بناءة تسهم في تطويره وإثرائه

كما لا يفوتنا أن نتقدم بالشكر إلى جميع أساتذة قسم الإلكترونيك الذين ساهموا في تكويننا العلمي طوال سنوات الدراسة، وإلى كل من قدم لنا يد العون والمساعدة ونخص بذلك السيد **الأخضري إسلام** الذي ما بخل علينا بمعلوماته ومد توجيهات وتوصيات ساهمت في إنجاح هذا العمل وأيضا الأستاذ **مقدم زكرياء** والى كل من ساهم في إنجاح هذا المشروع من قريب أو بعيد.

نسأل الله أن يجعل هذا العمل خالصًا لوجهه الكريم، وأن ينفع به الجميع.

إهـــداء

بسم الله الرحمن الرحيم

الحمد لله الذي وفقني لإتمام هذا العمل، أهدي ثمرة جهدي المتواضع:

إلى أمي الغالية، مصدر الحنان والعطاء، التي كانت دعواتها المباركة سندًا لي في كل خطوة، والتي غرست في نفسي قيم الصبر والاجتهاد، حفظها الله وأدامها تاجًا فوق رأسي.

إلى أختي الكبيرة العزيزة، التي كانت خير معين ونِعم الأخت، بدعمها وتشجيعها ومساندتها المستمرة.

إلى أخي العزيز، سندي ومسندي في هذه الحياة، الذي قال الله تعالى في حق مثله: ﴿سَنَشُدُّ عَضُدَكَ بِأَخِيكَ﴾، فكان لي خير أخ وخير عون، لم يبخل عليّ يومًا بالنصيحة والمساندة.

إلى جميع أفراد عائلتي الكريمة، الذين أحاطوني بالمحبة والدعم وشجعوني على مواصلة الطريق حتى بلوغ هذه المرحلة.

وإلى كل من ساهم في تعليمي وتوجيهي، وإلى كل من يحمل في قلبه أمنية النجاح والعلم.

أهدي هذا العمل المتواضع، راجيًا من الله أن يجعله خطوة مباركة في مسيرتي العلمية والمهنية.

"قويدري محمد العيد "

Abstract

This dissertation addresses the design and implementation of an intelligent embedded electronic system for the monitoring of electrical energy consumption and protecting electricity meters against risks associated with excessive temperature, humidity, and voltage and current limit violations. The system is based on the ESP32 microcontroller, which processes data collected from various sensors. Temperature and humidity are measured using a BMP280 sensor, while current is measured using an ACS712 sensor. In addition, voltage is monitored and electrical power consumption is calculated.

The collected data are displayed in real time on a color TFT ILI9341 display and can also be monitored remotely through a local digital platform, where the ESP32 operates as an independent Wi-Fi Access Point. This enables users to access the monitoring dashboard directly from their smartphones without requiring an Internet connection.

The system algorithm was first validated in the Proteus 8.13 simulation environment using temporary substitute components—an Arduino Uno instead of the ESP32, an LM35 sensor instead of the BMP280, and an LCD LM016L display instead of the TFT ILI9341—before proceeding to full practical implementation.

The proposed system is intended for a wide range of users, including residential consumers, industrial companies, and farmers. It represents a cost-effective solution suitable for large-scale deployment, as it operates entirely without Internet connectivity or subscription-based services.

Keywords: ESP32, BMP280, TFT ILI9341, Wi-Fi Access Point, Electrical Meter Protection, LM35, ACS712, Proteus

ملخص

تتناول هذه المذكرة تصـــميم وتنفيذ نظام إلكتروني مدمج ذكي لمراقبة اســتهلاك الطاقة الكهربائية وحماية عدادات الكهرباء من المخاطر المرتبطة بارتفاع درجة الحرارة والرطوبة، وكذلك تجاوز الحدود المسموح بها للجهد الكهربائي وشدة التيار. يعتمد النظام على المتحكم الدقيقESP32 ، الذي يقوم بمعالجة البيانات المجمعة من عدة مســـتشـــعرات. يتم قياس درجة الحرارة والرطوبة باستخدام مستشعرBMP280 ، بينما يتم قياس التيار الكهربائي باستخدام مستشعر .ACS712 بالإضافة إلى ذلك، تتم مراقبة الجهد الكهربائي وحساب استهلاك القدرة الكهربائية.

تُعرض البيانات المجمعة في الوقت الحقيقي على شـاشـة ملونة من نوعTFT ILI9341 ، كما يمكن مراقبتها عن بُعد عبر منصـة رقمية محلية، حيث يعمل المتحكم ESP32 كنقطة وصـول لاسلكية (Wi-Fi Access Point) مستقلة. ويتيح ذلك للمستخدمين الوصـول مباشرة إلى لوحة المراقبة من هواتفهم الذكية دون الحاجة إلى اتصـال بالإنترنت.

تم التحقق أولاً من صحة خوارزمية النظام في بيئة المحاكاة Proteus 8.13 باستخدام مكونات بديلة مؤقتة، حيث استُخدمت لوحة Arduino Uno بدلاً منESP32 ، ومسـتشـعر LM35 بدلاً منBMP280 ، وشـاشـة LCD LM016L بدلاً من شاشةTFT ILI9341 ، وذلك قبل الانتقال إلى مرحلة التنفيذ العملي الكامل.

يسـتهدف النظام المقترح شـريحة واسـعة من المسـتخدمين، بما في ذلك المسـتهلكين السـكنيين، والشـركات الصـناعية، والمزارعين. ويمثل حلاً اقتصـاديًا مناسبًا للتطبيق على نطاق واسع، إذ يعمل بشكل كامل دون الحاجة إلى اتصـال بالإنترنت أو إلى خدمات قائمة على الاشتراك.

الكلمات المفتاحية: ESP32، BMP280، ILI9341 TFT، WiFi Access Point، حماية العداد الكهربائي، LM35، Proteus

Résumé

Ce mémoire présente la conception et la réalisation d'un système électronique embarqué intelligent destiné à la surveillance de la consommation d'énergie électrique et à la protection des compteurs électriques contre les risques liés à l'élévation de la température, de l'humidité ainsi qu'aux dépassements des seuils de tension et de courant. Le système repose sur le microcontrôleur ESP32, chargé du traitement des données acquises à partir de différents capteurs. La température et l'humidité sont mesurées à l'aide du capteur BMP280, tandis que le courant est surveillé par le capteur ACS712. La tension électrique est également mesurée afin de calculer la puissance consommée.

Les données collectées sont affichées en temps réel sur un écran couleur TFT ILI9341 et peuvent également être surveillées à distance via une plateforme numérique locale, où l'ESP32 fonctionne comme un point d'accès Wi-Fi (Access Point) autonome. Cela permet aux utilisateurs d'accéder directement au tableau de bord de surveillance depuis leurs smartphones sans nécessiter de connexion Internet.

L'algorithme du système a d'abord été validé dans l'environnement de simulation Proteus 8.13 en utilisant des composants de substitution temporaires : une carte Arduino Uno à la place de l'ESP32, un capteur LM35 à la place du BMP280 et un afficheur LCD LM016L à la place de l'écran TFT ILI9341, avant de passer à l'implémentation pratique complète.

Le système proposé est destiné à un large éventail d'utilisateurs, notamment les consommateurs résidentiels, les entreprises industrielles et les agriculteurs. Il représente une solution économique adaptée à un déploiement à grande échelle, puisqu'il fonctionne entièrement sans connexion Internet ni services nécessitant un abonnement.

Mots-clés : ESP32, BMP280, ACS712, TFT ILI9341, Wi-Fi Access Point, Protection des compteurs électriques, LM35, Proteus.

Table of Contents

شكر و عرفان I

إهداء II

Abstract III

ملخص IV

Résumé V

Table of Contents II

List of Figures VIII

List of Tables VIII

Algorithm VIII

Équation VIII

List of Abbreviation X

General Introduction IX

CHAPTER I : Overview and Theoretical Background 4

I.1 Research Problem and Significance 4

I. 1. 1 Problematic 4

I. 1. 2 Scientific and Technical Objectives 4

I.2 Literature Review and Previous Works 5

I. 2. 1 Literature Review 5

I. 2. 2 Previous Works 6

I. 2. 3 Accident and Damage Statistics 8

I.3 Groups Most Affected by the Absence of Monitoring Systems: 10

CHAPTER II : Materials and methods 13

II.1 General System Architecture 13

II.2 Electronic Components Used 14

II. 2. 1 BMP280 Temperature and Humidity 16

II. 2. 2 ESP32 DevKit V1 Microcontroller 18

II. 2. 3 ILI9341 TFT 320×240 Display 20

II. 2. 4 Advantages in the Proposed System: 21

II. 2. 5 Protection Unit (Relay + PC817 + IRFZ44N) 21

II. 2. 6 PC817 Optocoupler 22

II. 2. 7 Voltage and Current Sensors 24

II. 2. 8 Power Calculation 26

II. 2. 9 Importance of Voltage and Current Monitoring 26

II.3 Local Digital Platform (Wi-Fi Access Point) 27
II. 3. 1 Operating Principle 27
II. 3. 2 Main Features of the Local Platform 27
II. 3. 3 Functions of the Platform 27
II. 3. 4 Advantages Over Cloud-Based Solutions 28
II. 3. 5 Role in the Proposed System 28
II. 3. 6 Simulation Environment and Justification for the Use of Alternative Components 28
II. 3. 7 Algorithm and Complete Source Code 31
II. 3. 8 Complete Pin Connection Table 33

CHAPTER III : Results and Discussion 36

III.1 Simulation Results in Proteus 8.13 36
III.2 Display Functionality Verification 37
III. 2. 1 Discussion of Results 38
III. 2. 2 Voltage, Current, and Power Measurement Results 39
III.3 Performance of the Local Digital Platform (Wi-Fi Access Point) 40
III. 3. 1 Network Connectivity Performance 40
III. 3. 2 Real-Time Monitoring Performance 41
III. 3. 3 Alarm and Protection Notifications 42
III. 3. 4 Coverage and Accessibility 42
III. 3. 5 Advantages Observed During Testing 43
III.4 Discussion of The Results 43
III.5 Overall Performance Analysis 44
III.6 Comparison with Previous Works 45
III. 6. 1 Advantages of the Proposed System: 45
III. 6. 2 Limitations 46
III. 6. 3 Discussion 46
III.7 Discussion of Results and System Limitations 47
III. 7. 1 System Limitations 47
III. 7. 2 Future Improvements 48
III.8 Conclusion 48
Conclusion 51
Recommendations 51

Table of Figure

Figure II-1General System Architecture Block General of the System..... 14
Figure II-2 represents the Simulation of the Protection Unit in Proteus..... 21
Figure II-2 Simulation Protection Unit (Relay + PC817 + IRFZ44N) In proteus..... 22
Figure II-4 Simulation In Proteus 8.13..... 31
Figure III-1 Network Connectivity Performance on the Phone..... 41
Figure III-2. Real-Time Monitoring Performance..... 42
Figure III-3 general layout model of our proposed Project..... 49

Table of Tables

Table I-1. Comparison Works Prior with in response to Current..... 8
Table I-2 Statistics on Electrical Accidents Caused by Thermal Hazards..... 9
Table II-1 Complete Electronic Components of the System..... 16
Table II-2 Comparison of real BMP280 vs LM35 in Simulation..... 18
Table II-3 Comparison between real ESP32 vs Arduino Uno in Simulation..... 19
Table II-4 Comparison of a real ILI9341 TFT vs LCD 16x2 in Simulation..... 21
Table II-5 Reasons for Component Substitution in Simulation (Proteus 8.13) Versus Practical Implementationin..... 29
Table II-6: Components terminals connections with ESP32 Pin..... 33
Table III-1 Simulation Results of different Temperature Testing..... 38
Table III-2 Measurement Results of Voltage and Accuracy..... 40
Table III-3Performance Evaluation of the Local Digital Platform..... 44
Table III-4 Comparison with Previous Works..... 45

Algorithm

Algorithm II.1. The Protection Unit operational flowchart...... 24
Algorithm II.2. General System Algorithm Architecture..... 32

Equation

Équation II.1 Electrical Power Equation..... 26
Équation III.1 Electric Energy Consumption Formula..... 40

List of Abbreviations

Abbreviation	Full Term	Description
ESP32	Espressif 32-bit Microcontroller	A low-cost microcontroller with integrated Wi-Fi and Bluetooth used as the main control unit.
BMP280	Barometric Pressure and Temperature Sensor	Digital sensor used for measuring temperature and atmospheric pressure.
ACS712	Allegro Current Sensor 712	Hall-effect current sensor used for AC/DC current measurement.
TFT	Thin-Film Transistor	A type of LCD technology providing high-quality color display.
ILI9341	ILI9341 TFT Display Driver	Display controller used to operate the TFT screen.
Wi-Fi	Wireless Fidelity	Wireless communication technology for networking devices.
AP	Access Point	A device or mode that creates a wireless network for client connections.
ADC	Analog-to-Digital Converter	Converts analog sensor signals into digital values for processing.
GPIO	General Purpose Input/Output	Programmable pins used for interfacing electronic components.
SPI	Serial Peripheral Interface	High-speed communication protocol between microcontrollers and peripherals.
I²C	Inter-Integrated Circuit	Two-wire communication protocol for connecting sensors and devices.
UART	Universal Asynchronous Receiver Transmitter	Serial communication interface between electronic devices.
PWM	Pulse Width Modulation	Technique used for controlling power and signal generation.
LCD	Liquid Crystal Display	Electronic display technology for presenting information.
LM35	LM35 Temperature Sensor	Analog temperature sensor used during simulation.
MCB	Miniature Circuit Breaker	Electrical protection device against overloads and short circuits.
IoT	Internet of Things	Network of interconnected devices capable of exchanging data.

Abbreviation	Full Term	Description
SCADA	Supervisory Control and Data Acquisition	Industrial monitoring and control system.
GSM	Global System for Mobile Communications	Mobile communication standard used for SMS and data transmission.
SMS	Short Message Service	Text messaging service used for notifications.
LED	Light Emitting Diode	Electronic component used as a visual indicator.
MOSFET	Metal-Oxide-Semiconductor Field-Effect Transistor	Electronic switching device used to drive the relay.
PCB	Printed Circuit Board	Board used to mechanically support and electrically connect components.
BLE	Bluetooth Low Energy	Low-power Bluetooth communication technology.
SSID	Service Set Identifier	The name of a Wi-Fi network.
WHO	World Health Organization	International public health organization.
IEC	International Electrotechnical Commission	International standards organization for electrical technologies.
IEEE	Institute of Electrical and Electronics Engineers	Professional organization for engineering and technology standards.
NFPA	National Fire Protection Association	Organization focused on fire safety standards.
IEA	International Energy Agency	Organization providing energy-related analysis and statistics.
DA	Algerian Dinar	Currency of Algeria.

General Introduction

The electrical meter is one of the fundamental components of the infrastructure of residential and industrial facilities, as it continuously measures electrical energy consumption, often without receiving significant attention from users. Despite its importance, it may be exposed to various risks, particularly those resulting from elevated temperatures inside meter cabinets. This issue can go unnoticed until it causes serious malfunctions, power outages, or, in some cases, electrical fires. In Algeria, as in many developing countries, incidents related to this phenomenon are reported regularly, mainly due to the absence of effective systems for thermal condition monitoring and early hazard detection.

This project was developed in response to this real-world challenge, offering an integrated technological solution that combines accurate sensing, real-time protection, and digital monitoring—all without requiring an Internet subscription or complex infrastructure. This makes the system accessible to both ordinary citizens and small-scale enterprises.

The ESP32 microcontroller forms the core of the system, integrating measurement, processing, control, and wireless communication capabilities within a single chip. By configuring it to operate as an independent Wi-Fi Access Point, the need for Internet connectivity is eliminated, significantly simplifying the user experience while maintaining reliable local access to monitoring and control functions.

This thesis is divided into three main chapters following the IMRAD scientific methodology:

Chapter I (Chapter I: overview and theoretical background): Theoretical framework, bibliographic review, and statistics.

Chapter II (Materials & Methods): Materials & Methodology, components, connections, algorithm, complete code, Simulation and practical work.

Chapter III (Results & Discussion): Simulation Results, performance analysis, comparison with related works.

General Conclusion: This work presented the design and implementation of a low-cost intelligent embedded system for monitoring and protecting electrical meters using the ESP32 microcontroller. The system successfully integrates temperature and humidity sensing, voltage and current measurement, power calculation, automatic protection, and real-time monitoring through a local Wi-Fi Access Point without requiring Internet connectivity.

The obtained results demonstrated the effectiveness of the proposed solution in detecting abnormal operating conditions, protecting electrical installations, and providing users with real-time access to system information. Owing to its simplicity, reliability, and affordability, the system represents a practical solution for residential, agricultural, and small industrial applications.

Future developments may include data logging, predictive maintenance features, and support for monitoring multiple electrical meters simultaneously.

Appendix: Economic study of the project, Economic Business Model.

CHAPTER I:

Overview and Theoretical Background

CHAPTER I : Overview and Theoretical Background

I.1 Research Problem and Significance

Residential and industrial electrical systems suffer from a near-complete absence of direct thermal monitoring mechanisms for electrical meters. Conventional protection methods rely primarily on miniature circuit breakers (MCBs), which intervene only after a fault condition has already begun to develop. Moreover, these devices do not monitor temperature itself and provide no means of informing the facility owner about the ongoing operating conditions of the electrical meter.

The risk becomes even greater in industrial environments, where meters are subjected to heavy electrical loads for extended periods, and in regions characterized by hot climates, where ambient temperatures are already elevated. In both situations, there is generally no early-warning system capable of alerting the owner before hazardous conditions are reached .

I. 1. 1 Problematic

How can a low-cost intelligent system be designed to continuously monitor the electrical meter temperature, supply voltage, and load current, while automatically protecting the circuit under hazardous conditions and providing real-time notifications to the user through a smartphone—without requiring Internet connectivity?

I. 1. 2 Scientific and Technical Objectives

The proposed project pursues a set of scientific and technical objectives aimed at enhancing the safety, reliability, and efficiency of electrical meter monitoring systems. These objectives can be summarized as follows:

- **Scientific Objectives**

To study the impact of environmental and electrical parameters, such as temperature, humidity, voltage, and current, on the performance and safety of electrical meters.

To investigate the integration of multiple sensors within an embedded system for real-time monitoring and data acquisition.

To evaluate the effectiveness of early-warning and protection mechanisms in preventing electrical faults and hazardous conditions.

To explore the capabilities of the ESP32 microcontroller as a platform for smart monitoring,

- **Technical Objectives**

To develop an intelligent embedded system capable of continuously monitoring temperature, humidity, voltage, current, and power consumption.

To display measured parameters in real time on a TFT ILI9341 color display.

To implement automatic protection functions, including relay-based circuit disconnection and visual alarm activation when predefined safety thresholds are exceeded.

To establish a local wireless monitoring platform using the ESP32 operating as a standalone Wi-Fi Access Point, enabling smartphone access without Internet connectivity.

To design a low-cost, energy-efficient, and easily deployable solution suitable for residential, industrial, and agricultural applications.

To validate the proposed system through simulation and practical implementation, ensuring reliable operation under different operating conditions, local communication, and automated control.

I.2 Literature Review and Previous Works

I. 2. 1 Literature Review

The rapid advancement of embedded systems and wireless communication technologies has lead to the development of numerous smart monitoring solutions for electrical installations. Researchers and engineers have increasingly focused on integrating sensors, microcontrollers, and communication modules to improve electrical safety, energy management, and fault detection capabilities.

Several previous studies have proposed systems for monitoring electrical parameters such as voltage, current, and power consumption using microcontrollers including Arduino, ESP8266, and ESP32 [5][6]. Many of these systems transmit collected data to cloud-based platforms through Internet connectivity, allowing users to remotely monitor energy usage and receive notifications in case of abnormal operating conditions.

Other research efforts have concentrated on thermal monitoring and protection of electrical equipment. These systems typically employ temperature sensors to detect overheating conditions and activate alarms or disconnect power when predefined thresholds are exceeded. Such approaches have proven efficiency in reducing the risk of equipment damage and

electrical fires.

More recently, the ESP32 microcontroller has attracted considerable attention due to its integrated Wi-Fi capabilities, processing power, low cost, and flexibility [1]. Numerous projects have utilized the ESP32 for Internet of Things (IoT) applications, including smart energy meters, environmental monitoring systems, and industrial safety solutions. However, most existing implementations depend on Internet access, cloud services, or external servers, which may increase deployment costs and reduce reliability in areas with limited connectivity.

The present work distinguishes itself by combining environmental monitoring (temperature and humidity), electrical parameter measurement (voltage, current, and power), automatic protection mechanisms, and a local wireless monitoring platform within a single integrated system. Unlike many previous solutions, the proposed design operates independently of Internet connectivity by configuring the ESP32 as a standalone Wi-Fi Access Point. This approach enhances accessibility, reduces operational costs, and makes the system particularly suitable for residential, agricultural, and small industrial applications.

I. 2. 2 Previous Works

- **Thermal Monitoring System for Electrical Meters Using Arduino and GSM (2021) [5]**

A group of researchers published a thermal monitoring system in 2021 based on the Arduino Mega microcontroller and the DS18B20 temperature sensor, with notifications transmitted through GSM/SMS communication. The system achieved an accuracy of ±0.5°C; however, it lacked real-time local visualization and remote control capabilities. In addition, it incurred continuous operational costs due to SMS service charges**.**

This work highlighted the importance of combining both local and remote alert mechanisms. It also demonstrated that digital communication protocols can increase software complexity when compared with simpler sensor interfacing approaches.

- **IoT-Based Electrical Appliance Protection Using ESP8266 and Blynk (2022)** An Indian research team developed a thermal protection system for household electrical appliances using the ESP8266 microcontroller, a DHT22 temperature and humidity sensor, and the Blynk mobile application. Although the system was functional, its complete reliance on the ESP8266 for both processing and communication made it susceptible to unexpected resets and stability issues**.**

This study emphasized the benefits of separating processing and communication tasks whenever possible. It also demonstrated the superior performance and stability of the ESP32 compared with the ESP8266. Furthermore, it drew attention to the fact that the Blynk platform requires a permanent Internet connection, a limitation that was overcome in the present project through the use of a standalone Wi-Fi Access Point (Wi-Fi AP) architecture.

- **Third Previous Work: Simplified SCADA System for Smart Meter Monitoring (Energies, 2023) [7]**

A study published in the journal Energies described a SCADA-based monitoring system for smart meters deployed in university buildings. The system utilized a Raspberry Pi 4, InfluxDB, and Grafana to provide advanced data acquisition, storage, and interactive visualization capabilities. While the solution offered rich monitoring features, the cost of the control unit alone exceeded USD 60, making it unsuitable for individual residential applications.

This work demonstrated that highly sophisticated systems are not always the most practical choice. The present project focuses on affordability, targeting a total system cost below USD 20 while preserving the essential monitoring and protection functions.

- **Fourth Previous Work: Relay-Based Thermal Control System (Iraq, 2020) [8]**

A student project implemented a thermal control system using an STM32F103 microcontroller, an LM35 temperature sensor, and a relay-controlled cooling fan. The system exhibited satisfactory accuracy and response time; however, it was limited to local monitoring and control, without any networking capability or remote notification features.

This project provided a solid example of effective thermal control and protection. Nevertheless, it lacked communication functionality, which is precisely the aspect enhanced in the present work through the integration of a local wireless monitoring layer based on a Wi-Fi Access Point hosted by the ESP32.

Table I-1. Comparison Works Prior with in response to Current

Reference	The ESP32	Sensor	Connection	Display
Egyptian 2021	Arduino Mega	DS18B20	GSM/SMS	
IEEE 2022	ESP8266	DHT22	Wi-Fi Platform/Blynk	requires constant
SCADA 2023	Raspberry Pi 4	Multiple	Network an ESP32-integrated	Grafana
Iraqi 2020	STM32F103	LM35		LCD Local
at under 15000DA	ESP32 DevKit	BMP280	Wi-Fi AP Local	ILI9341 TFT + Web

I. 2. 3 Accident and Damage Statistics

Electrical faults associated with overheating, excessive current, and insulation degradation remain among the leading causes of damage to residential and industrial electrical installations. Numerous incidents are linked to prolonged overloading, poor electrical connections, inadequate ventilation of meter cabinets, and the absence of continuous monitoring systems capable of detecting abnormal operating conditions at an early stage.

Studies and reports from electrical safety organizations indicate that overheating of electrical components is a significant contributing factor in many electrical fires and equipment failures. Elevated temperatures accelerate the aging of insulation materials, reduce the lifespan of electrical equipment, and increase the probability of short circuits and system outages. The risk becomes particularly pronounced in regions characterized by high ambient temperatures and rapidly growing electricity demand.

In industrial environments, electrical failures can result not only in equipment damage but also in production downtime, financial losses, and increased maintenance costs. Similarly, in residential settings, meter and distribution panel failures may lead to power interruptions, property damage, and safety hazards for occupants.

These statistics and observations highlight the necessity of implementing preventive monitoring and protection systems capable of continuously tracking temperature, humidity, voltage, and current conditions. Early detection of abnormal parameters allows corrective actions to be taken before serious damage occurs, thereby improving electrical safety, enhancing system reliability, and reducing maintenance and replacement costs

Official statistics and field studies reveal the true extent of the risks associated with excessive heat in electrical meters:

Table I-2 Statistics on Electrical Accidents Caused by Thermal Hazards.

Indicator	Value	Source
Percentage of residential fires caused by electrical faults.	23%	WHO / IEC 2022
Rate of overheating in electrical failures.	34%	IEEE Power & Energy 2021
Average material losses per residential electrical fire	160M DA	NFPA 2022
Number of annual deaths from electrical fires globally	Over thermal monitoring 30,000 cases	WHO 2023
Percentage of Electrical meters not equipped with thermal protection	More than thermal monitoring 78%	IEC TC13 2022
Expected rise in incidents by 2030 without intervention	+40%	IEA 2023
Cost of prevention vs disaster	1 vs 15	CIGRE 2022

It is worth noting that Algerian statistics indicate that the rate of electrical incidents in industrial areas is approximately twice that observed in residential areas. This is primarily attributed to the continuous operation under heavy electrical loads, which accelerates the deterioration of cable insulation and electrical meter components.

I.3 Groups Most Affected by the Absence of Monitoring Systems:

- **Low-income households:** These users often lack the financial resources required to install expensive commercial protection and monitoring devices.
- **Small and medium-sized industrial enterprises (SMEs):** Such facilities frequently operate under varying load conditions and often utilize poorly ventilated meter cabinets, increasing the risk of overheating.
- **Older residential buildings:** These structures commonly suffer from aging electrical insulation and inadequate ventilation within meter enclosures, making them more vulnerable to electrical faults.
- **Rural areas:** These locations are typically far from maintenance centers and may lack the communication infrastructure required by conventional Internet-based monitoring solutions, making local and autonomous monitoring systems particularly valuable.

CHAPTER II:

Materials and methods

CHAPTER II : Materials and methods

II.1 General System Architecture

The proposed system is designed around a centralized architecture in which the ESP32 microcontroller serves as the main processing and control unit. The system integrates environmental and electrical sensors, a local display interface, protection mechanisms, and wireless communication capabilities to provide comprehensive monitoring and protection of the electrical meter.

The operating principle begins with the acquisition of environmental and electrical data. The BMP280 sensor continuously measures temperature and humidity conditions inside the meter enclosure, while the ACS712 sensor monitors load current. Voltage measurements are also performed to determine the supply conditions and calculate electrical power consumption.

The collected data are processed by the ESP32, which compares the measured values with predefined safety thresholds. Under normal operating conditions, the measured parameters are displayed in real time on the TFT ILI9341 color screen, and simultaneously transmitted to a local monitoring interface accessible through a smartphone.

When abnormal conditions are detected, such as excessive temperature, overvoltage, or overcurrent, the ESP32 automatically activates the protection mechanism. This includes triggering a visual alarm and disconnecting the electrical circuit through a relay to prevent potential equipment damage or safety hazards.

For communication, the ESP32 operates as a standalone Wi-Fi Access Point, creating a local wireless network that allows authorized users to access the monitoring dashboard directly from their smartphones without requiring Internet connectivity or external servers.

Main System Components:

- ESP32 microcontroller (central control and processing unit)
- BMP280 temperature and humidity sensor
- ACS712 current sensor
- Voltage measurement circuit
- TFT ILI9341 color display
- Relay protection module

- Visual alarm indicator (LED)
- Local web-based monitoring interface
- Wi-Fi Access Point communication module integrated into the ESP32

This architecture ensures reliable monitoring, rapid fault detection, automatic protection, and easy user access while maintaining low cost and complete independence from Internet-based services.

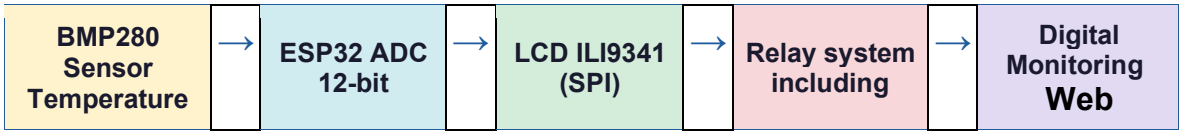

Figure II-1General System Architecture Block General of the System

II.2 Electronic Components Used

The proposed system is built using a set of electronic components selected to ensure accurate monitoring, reliable protection, and efficient wireless communication. The main components are described below:

- **ESP32 Microcontroller**

  The ESP32 serves as the central processing unit of the system. It is responsible for acquiring sensor data, performing calculations, controlling the protection mechanisms, updating the display, and managing wireless communication. Its integrated Wi-Fi capability enables the creation of a standalone Access Point without requiring additional communication modules.

- **BMP280 Sensor**

  The BMP280 sensor is used to measure temperature and humidity conditions inside the electrical meter enclosure. Continuous monitoring of these environmental parameters helps detect abnormal operating conditions that may lead to overheating and equipment damage.

- **ACS712 Current Sensor**

  The ACS712 sensor measures the electrical current flowing through the load. It provides an analog output proportional to the current value, allowing the ESP32 to monitor power consumption and detect overcurrent conditions.

- **Voltage Measurement Circuit**

  A voltage sensing circuit is employed to measure the supply voltage. The measured voltage is processed by the ESP32 to monitor network conditions and identify overvoltage or undervoltage situations.

- **TFT ILI9341 Color Display**

  The TFT ILI9341 display provides a real-time visual interface for the user. It presents key system parameters such as temperature, humidity, voltage, current, and power consumption in a clear and user-friendly format.

- **Relay Module**

  The relay module functions as the system's protection actuator. When hazardous conditions are detected, the ESP32 commands the relay to disconnect the electrical circuit, thereby preventing damage to the meter and connected equipment.

- **Visual Alarm Indicator (LED)**

  An LED indicator is used to provide immediate visual notification whenever a fault or abnormal operating condition occurs.

- **Power Supply Unit**

  A regulated power supply provides the required operating voltage for the ESP32, sensors, display, and protection circuitry, ensuring stable and reliable system operation.

- **Smartphone Monitoring**

Interface Although not a physical electronic component, the smartphone acts as a user interface through the local web dashboard hosted by the ESP32. Users can access real-time monitoring data through the Wi-Fi Access Point without requiring Internet connectivity.

➢ Together, these components form an integrated embedded system capable of real-time monitoring, automatic protection, and local wireless supervision of electrical meter operating conditions.

Table II-1 Complete Electronic Components of the System.

Component	Model	Function	Interface	Voltage
Microcontroller Main	ESP32 DevKit V1	Processing + WiFi AP	ADC/I2C/SPI/GPIO	3.3V
Sensor automatically protect and Pressure	BMP280	T, P costs due to SMS fees. ±0.5°C	I2C (A4/A5)	3.3V
Display TFT Color	ILI9341 320×240	interactive data display, thresholds are exceeded. Rich	SPI	3.3V
Unit Relay	SRD-05VDC-SL-C	when predefined without requiring	GPIO + NPN	5V
Optical Isolator thresholds are exceeded.	PC817	System including The ESP32 thermal monitoring 220V	GPIO	3.3-5V
Transistor Control	IRFZ44N N-MOSFET	Drive Relay Coil Relay	Gate thermal monitoring PC817	12V
the voltage divider Voltage	R1=30kΩ, R2=7.5kΩ	Measurement voltage notify the user	Analog → A1	—
Sensor	ACS712 / Shunt	Measurement Current without requiring	Analog → A2	5V
Indicator Visual	LED Red 5mm	The danger threshold. thresholds are exceeded.	GPIO + 220Ω	3.3V
Power Source	HLK-5M05	220V → 5V	—	220V AC
Voltage Regulator 3.3V	AMS1117-3.3	Power Supply ESP32	5V → 3.3V	—

II. 2. 1 BMP280 Temperature and Humidity

Sensor the BMP280 is a compact and highly accurate environmental sensor widely used [2] in embedded systems and Internet of Things (IoT) applications. It is designed to measure temperature and atmospheric pressure with low power consumption and high precision. In the proposed system, the sensor is utilized to continuously monitor the thermal conditions inside the electrical meter enclosure, helping to detect overheating situations before they become hazardous.

The BMP280 communicates with the ESP32 through either the **I²C** or **SPI** communication protocol, enabling reliable and efficient data transfer. Its digital output eliminates the need for complex analog signal conditioning and improves measurement accuracy.

- **Main Features of the BMP280:**
  - Digital temperature and pressure sensor.
  - High measurement accuracy and stability.
  - Low power consumption, suitable for continuous operation.
  - Supports both I²C and SPI communication interfaces.
  - Compact size and easy integration with microcontroller-based systems.
  - Fast response time for real-time monitoring applications.
- **Role in the Proposed System:**
  - Continuous monitoring of the temperature inside the electrical meter cabinet.
  - Early detection of abnormal temperature rises that may indicate overloads or poor electrical connections.
  - Providing environmental data to the ESP32 for decision-making and protection actions.
  - Displaying temperature readings on the TFT ILI9341 screen and transmitting them to the local monitoring platform.

- **Technical Specifications:**
  - Operating voltage: **1.71 V to 3.6 V**
  - Temperature measurement range: **−40°C to +85°C**
  - Temperature accuracy: **±1°C (typical)**
  - Communication protocols: **I²C / SPI**
  - Low-power operation suitable for embedded applications

By providing accurate and continuous temperature measurements, the BMP280 contributes significantly to the reliability and safety of the proposed electrical meter monitoring and protection system.

Table II-2 Comparison of real BMP280 vs LM35 in Simulation.

Parameter	BMP280 (at under 1000DA total)	LM35 (Simulation Proteus)
Type Output Layer:	digital (I2C/SPI)	Analog (ADC)
Temperature costs due to SMS fees.	±0.5°C	±0.5°C
Measurement humidity	Yes (300-1100 hPa)	
Manual Equation	Required (Adafruit_BMP280 library)	Required
Compatibility with Proteus	Limited	Excellent
Voltage	1.8V - 3.6V	4V - 30V
Price Approx.	1000DA	250DA

II. 2. 2 ESP32 DevKit V1 Microcontroller

The ESP32 DevKit V1 is the main control and processing unit of the proposed system. It is a powerful development board based on the ESP32 microcontroller developed by Espressif Systems, featuring a dual-core processor, integrated Wi-Fi connectivity, multiple input/output interfaces, and low power consumption. These capabilities make it particularly suitable for smart monitoring, control, and Internet of Things (IoT) applications.

In the proposed system, the ESP32 DevKit V1 is responsible for acquiring data from sensors, processing measurements, calculating electrical parameters, controlling protection mechanisms, updating the display, and hosting the local monitoring platform. By operating as a standalone Wi-Fi Access Point, it allows users to access the monitoring dashboard directly from a smartphone without requiring Internet connectivity.

- **Main Features of the ESP32 DevKit V1:**
  - Dual-core 32-bit processor with high computational performance.
  - Integrated Wi-Fi and Bluetooth connectivity.
  - Multiple GPIO pins for sensor and peripheral interfacing.
  - Support for analog and digital inputs/outputs.
  - Low power consumption suitable for embedded applications.
  - Compatible with the Arduino IDE and other development environments.
  - Supports communication protocols such as I²C, SPI, UART, and PWM.

- **Role in the Proposed System:**
  - Reading temperature, humidity, voltage, and current measurements.
  - Calculating electrical power consumption.
  - Comparing measured values with predefined safety thresholds.
  - Controlling the relay and alarm system during fault conditions.
  - Displaying real-time data on the TFT ILI9341 screen.
  - Creating a secure local Wi-Fi Access Point for remote monitoring.
  - Hosting the web-based monitoring dashboard accessible through smartphones.

- **Technical Specifications:**
  - ✓ Processor: Dual-core Xtensa ® 32-bit LX6
  - ✓ Clock frequency: Up to **240 MHz**
  - ✓ Operating voltage: **3.3 V**
  - ✓ Flash memory: Typically **4 MB**
  - ✓ Wi-Fi standard: **802.11 b/g/n**
  - ✓ Bluetooth: Classic Bluetooth and Bluetooth Low Energy (BLE)
  - ✓ Digital I/O pins: Up to **34 GPIOs** (depending on board version)
  - ✓ ADC resolution: **12-bit**

The ESP32 DevKit V1 was selected because it combines processing, control, and wireless communication capabilities within a single low-cost platform, significantly reducing system complexity while enhancing performance, reliability, and ease of deployment

Table II-3 Comparison between real ESP32 vs Arduino Uno in Simulation.

Feature	ESP32 (at under 2200DA total)	Arduino Uno (Simulation)
Processor	Xtensa LX6, 32-bit, processor enabling	AVR, 8-bit, Core the capabilities of
Clock Speed	240 MHz	16 MHz
Flash	4 MB	32 KB
RAM	520 KB	2 KB
ADC Costs due to SMS fees	12-bit (4096 levels)	10-bit (1024 levels)
WiFi AP	Yes (AP + STA)	
SPI WiFi AP	Yes (Fast Very)	Yes (Slow)
Compatibility with Proteus	Limited (Substitute Arduino)	Excellent

II. 2. 3 ILI9341 TFT 320×240 Display

The **ILI9341 TFT 320×240** is a color liquid-crystal display (TFT LCD) widely used in embedded systems for real-time visualization of data and user interaction. It provides a high-resolution graphical interface, enabling the clear presentation of measured parameters, system status information, and alarm notifications.

In the proposed system, the display serves as the primary local user interface, presenting real-time readings of temperature, humidity, voltage, current, and power consumption. It also provides visual indications of system operating conditions and warning messages whenever abnormal situations are detected.

- **Main Features of the ILI9341 TFT Display:**
  - Color TFT LCD display with vivid and clear graphics.
  - Resolution of **320 × 240 pixels (QVGA)**.
  - Supports text, icons, graphs, and custom graphical interfaces.
  - Fast refresh rate suitable for real-time monitoring applications.
  - SPI communication interface for efficient connection with microcontrollers.
  - Low power consumption and compact design.

- **Role in the Proposed System:**
  - Displaying temperature and humidity measurements obtained from the BMP280 sensor.
  - Showing voltage, current, and calculated power values in real time.
  - Indicating system operating status and protection conditions.
  - Displaying warning and alarm messages when safety thresholds are exceeded.
  - Providing an intuitive and user-friendly local monitoring interface.

- **Technical Specifications:**
  - ✓ Display type: TFT LCD
  - ✓ Driver controller: **ILI9341**
  - ✓ Resolution: 320 × 240 pixels
  - ✓ Color depth: Up to 65,536 colors (16-bit color)
  - ✓ Communication interface: **SPI**

- ✓ Operating voltage: **3.3 V**
- ✓ Display size: Typically **2.4 inches** (depending on module version)

II. 2. 4 Advantages in the Proposed System:

- ➢ Clear visualization of multiple parameters simultaneously.
- ➢ Improved user experience through graphical representation of data.
- ➢ Real-time feedback without requiring external devices.
- ➢ Easy integration with the ESP32 through the SPI interface.

The ILI9341 TFT display was selected because it offers an excellent balance between cost, performance, readability, and graphical capabilities, making it well suited for real-time monitoring and protection applications.

Table II-4 Comparison of a real ILI9341 TFT vs LCD 16x2 in Simulation

Parameter	ILI9341 TFT (Actual)	LCD 16x2 LM016L (Simulation)
response, but was	320×240 pixels	16 character × 2 line
Colors	65,536 colors	Green/Black only
Interface	SPI (5 wires)	parallel (11 wires)
graphical chart	Yes	
Compatibility with Proteus	Partial	Excellent
Price	3200DA	500DA

II. 2. 5 Protection Unit (Relay + PC817 + IRFZ44N)

The protection unit is a critical component of the proposed system, responsible for disconnecting the electrical load whenever hazardous operating conditions are detected. It consists of a **relay module**, a **PC817 optocoupler**, and an **IRFZ44N MOSFET**, which together provide reliable switching, electrical isolation, and safe control of high-power circuits.

The ESP32 continuously monitors temperature, voltage, and current values. When any parameter exceeds its predefined safety threshold, the microcontroller activates the protection circuit, causing the relay to disconnect the load and prevent potential damage to the electrical meter or connected equipment. Figure II-2 represents the Simulation of the Protection Unit in Proteus.

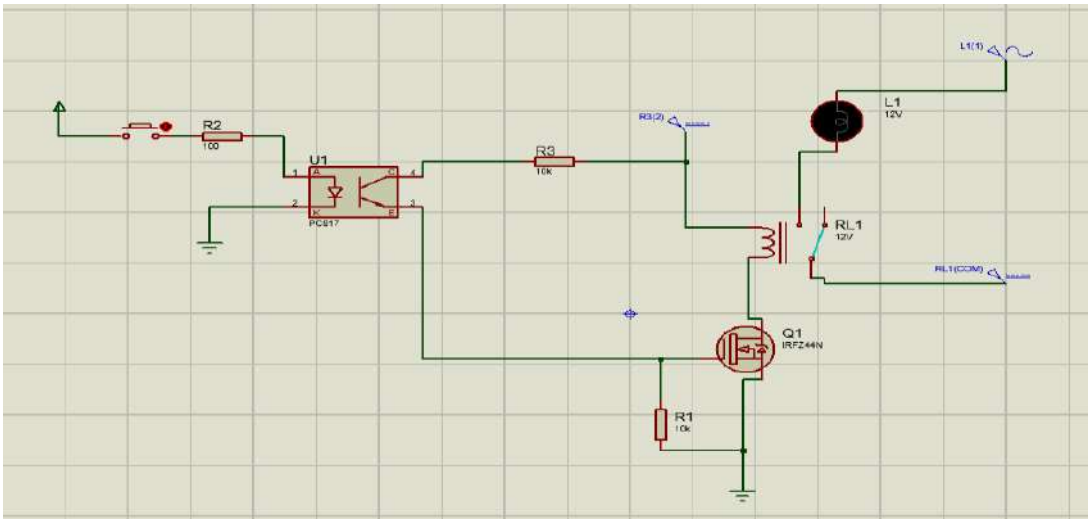

Figure II-2 Simulation Protection Unit (Relay + PC817 + IRFZ44N) In proteus.

II. 2. 6 PC817 Optocoupler

The PC817 is used to provide **galvanic isolation** between the low-voltage control circuitry (ESP32) and the high-power switching circuit. This isolation protects the microcontroller from voltage spikes, electrical noise, and fault currents that may originate from the power side of the system.

- **Functions of the PC817:**

  - Electrical isolation between control and power circuits.
  - Protection of the ESP32 against electrical disturbances.
  - Improved system reliability and operational safety.

- **IRFZ44N MOSFET**

The IRFZ44N is an N-channel power MOSFET used as an electronic switch to drive the relay coil efficiently. Since the ESP32 GPIO pins cannot supply sufficient current to energize the relay directly, the MOSFET acts as an intermediate driver capable of handling higher currents.

- **Functions of the IRFZ44N:**
  - Amplifies the switching capability of the ESP32 output.
  - Drives the relay coil safely and efficiently.
  - Provides fast switching and low conduction losses.

- **Relay Module**

The relay serves as the final switching element in the protection system. Once activated by the control circuit, it can disconnect the electrical load from the power supply, thereby preventing equipment damage and reducing safety risks.

- **Functions of the Relay:**
  - Automatic disconnection of the electrical circuit during fault conditions.
  - Isolation of the protected load from the power source.
  - Reliable operation under various electrical load conditions.
- **Operating Principle**
  - Sensors continuously monitor temperature, voltage, and current.
  - The ESP32 processes the acquired measurements and compares them with predefined safety limits.
  - When a hazardous condition is detected, the ESP32 sends a control signal to the PC817 optocoupler.
  - The optocoupler electrically isolates the control stage and triggers the IRFZ44N MOSFET.
  - The MOSFET energizes or de-energizes the relay coil.
  - The relay disconnects the electrical load, protecting the meter and connected equipment from potential damage.

- **Advantages of the Protection Unit**
  - ✓ High operational reliability.
  - ✓ Electrical isolation between control and power stages.
  - ✓ Fast response to abnormal conditions.
  - ✓ Protection against overheating, overcurrent, and overvoltage situations.
  - ✓ Low implementation cost and easy integration with the ESP32-based system.

The combination of the **PC817 optocoupler**, **IRFZ44N MOSFET**, and **relay** provides a robust and cost-effective protection mechanism, ensuring safe and automatic operation of the proposed electrical meter monitoring system.

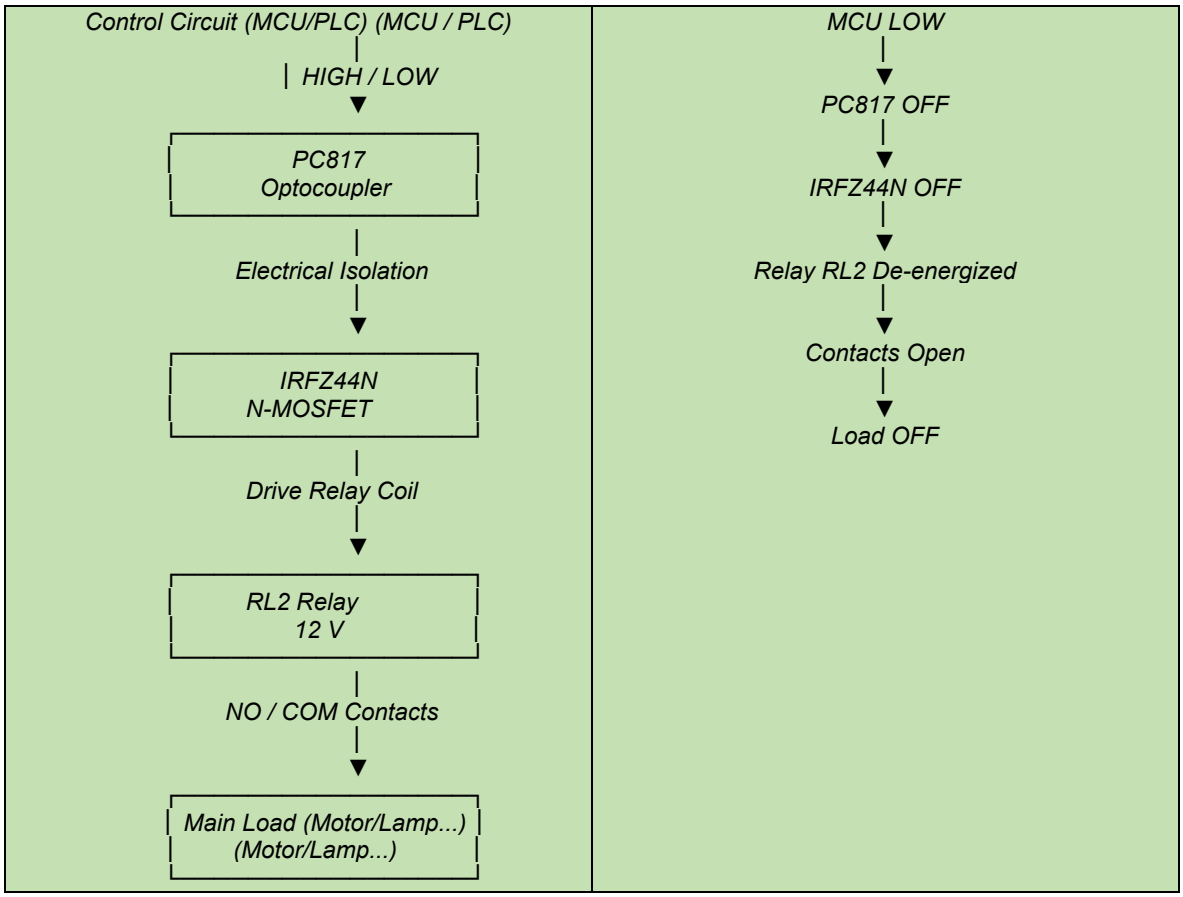

Algorithm II.1The Protection Unit operational flowchart.

II. 2. 7 Voltage and Current Sensors

The measurement of electrical parameters is an essential function of the proposed monitoring system. To ensure continuous supervision of the electrical network and connected loads, dedicated sensors are employed to measure both voltage and current. The acquired data are processed by the ESP32 to determine the operating status of the system, calculate electrical power consumption, and detect abnormal conditions such as overvoltage and overcurrent.

- **Current Sensor (ACS712)**

The **ACS712** is a Hall-effect-based current sensor widely used for AC and DC current measurement applications. It provides an analog output voltage proportional to the current flowing through the conductor, while maintaining electrical isolation between the measured circuit and the control electronics.

- **Main Features of the ACS712:**
  - Measures both AC and DC currents.
  - Based on Hall-effect sensing technology.
  - Provides electrical isolation between the power circuit and the measurement circuit.
  - High sensitivity and fast response time.
  - Easy interfacing with microcontrollers through analog inputs.
- **Role in the Proposed System:**

Measuring the load current continuously.

Detecting overcurrent conditions.

Providing current data for power calculation.

Assisting the protection unit in making automatic disconnection decisions.

- **Typical Specifications:**
  - ✓ Operating voltage: **5 V**
  - ✓ Output type: Analog voltage
  - ✓ Measurement ranges: ±5 A, ±20 A, or ±30 A (depending on the module version)
  - ✓ Response time: Less than **5 µs**
- **Voltage Sensor**

The voltage sensor is used to monitor the electrical supply voltage and provide a scaled-down signal suitable for the ESP32 analog input. The measured voltage allows the system to supervise network conditions and identify abnormal operating situations.

- **Main Features of the Voltage Sensor:**
  - Continuous voltage monitoring.
  - Safe voltage reduction through an integrated conditioning circuit.
  - Compatibility with microcontroller analog inputs.
  - Simple and low-cost implementation.
- **Role in the Proposed System:**

Measuring the supply voltage in real time.

Detecting overvoltage and undervoltage conditions.

Providing voltage data for power calculations.

Supporting the automatic protection mechanism.

- **Typical Specifications:**
  - ✓ Input voltage range: Depending on the sensor module and scaling circuit.
  - ✓ Output type: Analog voltage proportional to the measured input.
  - ✓ Compatible with ESP32 analog-to-digital converter (ADC).

II. 2. 8 Power Calculation

Using the measured voltage and current values, the ESP32 calculates the electrical power consumed by the load according to the following relationship:

Équation II.1 Electrical Power Equation

$$P=V\times IP = V \times IP=V\times I$$

Where:

P = Electrical Power (W)

V = Voltage (V)

I = Current (A)

The calculated power value is displayed on the TFT ILI9341 screen and made available through the local monitoring interface hosted by the ESP32.

II. 2. 9 Importance of Voltage and Current Monitoring

- ➢ Continuous supervision of electrical operating conditions.
- ➢ Early detection of abnormal voltage and current levels.
- ➢ Improved safety and reliability of electrical installations.
- ➢ Support for automatic protection and fault prevention.
- ➢ Real-time estimation of energy usage and load behavior.

The integration of the **ACS712 current sensor** and the **voltage sensing circuit** enables comprehensive monitoring of electrical parameters, forming a key part of the intelligent protection and energy management capabilities of the proposed system.

II.3 Local Digital Platform (Wi-Fi Access Point)

The local digital platform is one of the key features of the proposed system, enabling users to monitor electrical and environmental parameters remotely without requiring an Internet connection. This platform is implemented by configuring the ESP32 to operate as a standalone **Wi-Fi Access Point (AP)**, creating a private wireless network that allows direct communication between the system and the user's smartphone, tablet, or computer.

Unlike conventional IoT solutions that rely on cloud servers and continuous Internet access, the proposed platform operates entirely within a local network. This approach reduces operating costs, enhances privacy, and ensures uninterrupted monitoring even in locations where Internet connectivity is unavailable or unreliable.

II. 3. 1 Operating Principle

When powered on, the ESP32 creates a secure Wi-Fi network identified by a unique SSID and protected by a password. Users can connect directly to this network using their smartphones or other Wi-Fi-enabled devices. After establishing the connection, they can access a web-based monitoring dashboard hosted internally by the ESP32 through a standard web browser.

The dashboard displays real-time information collected from the sensors, including temperature, humidity, voltage, current, and electrical power consumption. It also provides status indicators and alarm notifications whenever abnormal operating conditions are detected.

II. 3. 2 Main Features of the Local Platform

- Internet-independent operation.
- Secure access through password authentication.
- Real-time monitoring of all measured parameters.
- Compatibility with smartphones, tablets, and computers.
- No subscription fees or cloud-service costs.
- Fast local communication with low latency.
- Easy deployment and maintenance.

II. 3. 3 Functions of the Platform

- Displaying temperature and humidity measurements.

- Showing voltage, current, and power consumption values.
- Indicating system status and protection conditions.
- Providing immediate alarm notifications when safety thresholds are exceeded.
- Allowing users to monitor the system remotely within the local wireless coverage area.

II. 3. 4 Advantages Over Cloud-Based Solutions

- No Internet connection required.
- Enhanced data privacy and security.
- Reduced implementation and operating costs.
- Greater reliability in rural and remote areas.
- Elimination of dependence on external servers or third-party services.

II. 3. 5 Role in the Proposed System

The local digital platform serves as the communication bridge between the monitoring system and the user. By leveraging the ESP32's built-in Wi-Fi capabilities, it provides a simple, economical, and reliable method for accessing real-time system information while maintaining complete independence from Internet infrastructure.

As a result, the proposed solution combines the benefits of smart monitoring and remote accessibility with the practicality and affordability required for residential, industrial, and agricultural applications.

II. 3. 6 Simulation Environment and Justification for the Use of Alternative Components

Before implementing the proposed system in hardware, the design and control algorithms were validated using the **Proteus 8.13** simulation environment. Simulation plays a crucial role in embedded system development, as it allows the designer to verify circuit functionality, test software behavior, identify potential errors, and reduce development costs before proceeding to physical implementation.

However, certain components used in the final design were either unavailable or not fully supported in the selected version of Proteus. Consequently, alternative components with similar

functional characteristics were employed during the simulation phase to ensure the correct validation of the system logic and control strategy.

▪ Simulation Environment

The simulation was carried out using **Proteus 8.13 Professional**, which provides an integrated platform for electronic circuit design, microcontroller simulation, and embedded software testing. The environment enabled the verification of sensor readings, protection logic, display functionality, and overall system operation under different test conditions.

Table II-5 Reasons for Component Substitution in Simulation (Proteus 8.13) Versus Practical Implementationin.

Actual Component	Alternative Component Used in Proteus	Justification
ESP32 DevKit V1	Arduino Uno	The ESP32 model was not fully supported in the simulation environment. The Arduino Uno was used to validate the program logic, sensor interfacing, and protection algorithms.
BMP280	LM35	The LM35 was used as a substitute temperature sensor to simulate thermal measurements and test temperature-based protection functions.
TFT ILI9341 Display	LCD LM016L	The character LCD was used to verify data visualization and user-interface functionality in the simulation environment.
Actual Component	Alternative Component Used in Proteus	Justification

▪ Rationale for Component Substitution

The purpose of the simulation phase was not to replicate the exact hardware configuration, but rather to validate the operational principles of the system. The selected substitute components allowed the verification of:

- Sensor data acquisition and processing.
- Temperature monitoring algorithms.
- Voltage and current supervision logic.

- Automatic protection and relay control functions.
- Display and user-interface operation.
- General software reliability before hardware deployment.

- **Limitations of the Simulation**

Although the simulation successfully validated the system architecture and control algorithms, certain hardware-specific features of the ESP32 could not be fully reproduced. In particular:

- Integrated Wi-Fi Access Point functionality was not available in the simulation.
- Actual communication performance could only be evaluated during physical implementation.
- Real-world sensor accuracy and environmental influences could not be completely modeled.

- **Benefits of the Simulation Stage**

- Reduced development time and cost.
- Early detection of design and programming errors.
- Verification of protection and control algorithms.
- Improved reliability prior to hardware construction.
- Safer and more efficient transition to practical implementation.

Therefore, the use of **Proteus 8.13** together with carefully selected alternative components provided an effective and economical method for validating the proposed system before proceeding to the final ESP32-based hardware implementation.

It is important to emphasize that the primary objective of the simulation was to validate the correctness of the system algorithm and control logic—including temperature acquisition, threshold comparison, LED and relay control, and data display on the screen—rather than to evaluate the performance of the actual hardware components.

Accordingly, the simulation focused on verifying the functional behavior of the proposed system and ensuring that the protection and monitoring mechanisms operated as intended under various test conditions. The use of substitute components did not affect the validation of the core algorithmic processes, since the emphasis was placed on software functionality and system logic rather than hardware-specific characteristics.

The transition from the simulation stage to the real hardware implementation, including the replacement of the substitute components with the actual ESP32-based system and the verification of practical performance, is fully documented and discussed in **Chapter 3**.

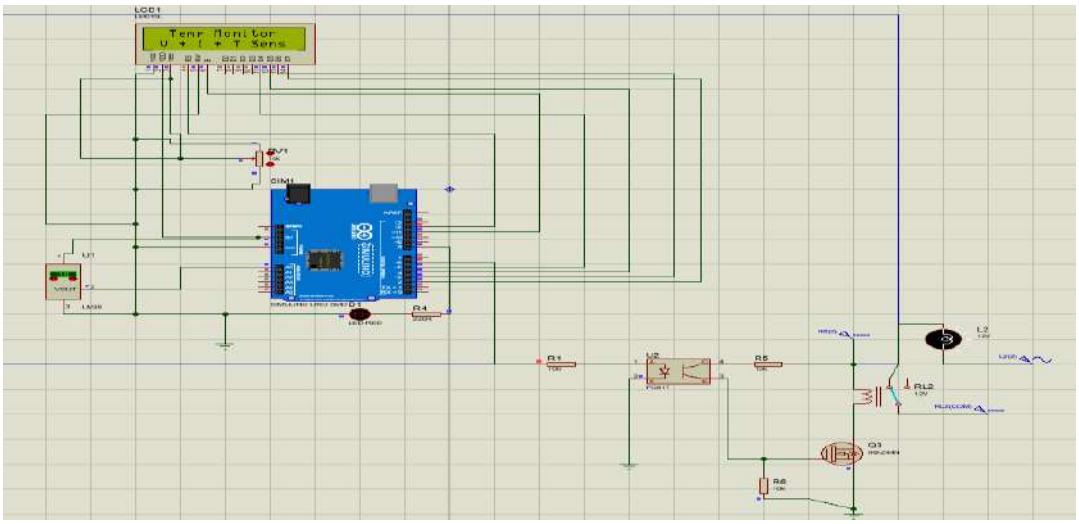

Figure II-3 Simulation In Proteus 8.13.

II. 3. 7 Algorithm and Complete Source Code

The operation of the proposed system is based on a real-time monitoring and protection algorithm executed by the ESP32 microcontroller. The algorithm continuously acquires data from the connected sensors, processes the measurements, compares them with predefined safety thresholds, updates the display, and activates the protection mechanism whenever abnormal conditions are detected.

- **Algorithm Overview**

The system follows the sequence below:

- Initialize the ESP32 and all peripheral devices.
- Configure the BMP280 sensor, ACS712 current sensor, voltage sensing circuit, TFT ILI9341 display, relay module, and status LED.
- Create a local Wi-Fi Access Point and start the embedded web server.
- Continuously read temperature, humidity, voltage, and current values.
- Calculate electrical power consumption from the measured voltage and current.
- Display all parameters on the TFT screen.

- Update the local monitoring webpage with the latest measurements.
- Compare sensor readings with predefined safety limits.

If a threshold is exceeded:

- Activate the visual alarm.
- Trigger the relay protection mechanism.
- Display a warning message.

❖ Return to the monitoring cycle and repeat continuously.

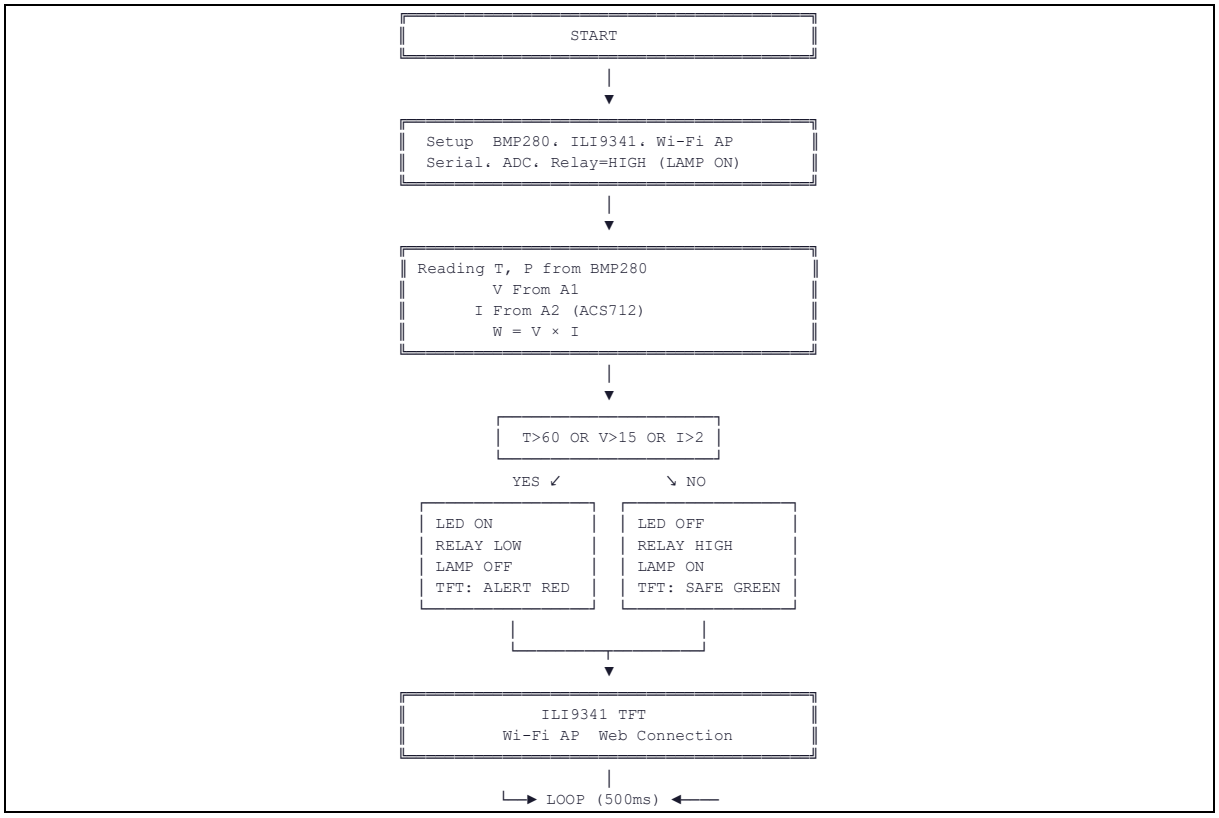

Algorithm II.2. General System Algorithm Architecture.

▪ Source Code Implementation

The complete source code of the system was developed using the Arduino IDE and written in C/C++ for the ESP32 platform. The software consists of several functional modules:

- Sensor acquisition module.
- Data processing and power calculation module.
- TFT display management module.

- Protection and alarm control module.
- Wi-Fi Access Point configuration module.
- Embedded web server module.
- User interface and dashboard generation module.

The source code integrates all these modules into a single embedded application capable of performing continuous monitoring, automatic protection, and local wireless communication.

Note: The full source code is provided in the appendix of this dissertation due to its length, while the following sections describe the main software routines, functions, and implementation details used in the development of the system.

II. 3. 8 Complete Pin Connection Table

The following table summarizes the pin assignments used in the proposed system. These connections enable communication between the ESP32 microcontroller and the various sensors, display modules, and protection components. The dataset was then split into a training set (80%) and a testing set (20%), which is a standard practice in scientific research to ensure fair model evaluation.

Table II-6: Components terminals connections with ESP32 Pin.

Component	Pin Component	GPIO ESP32	Function
BMP280	SDA	GPIO 21	I2C Data
BMP280	SCL	GPIO 22	I2C Clock
BMP280	VCC	3.3V	Power Supply
ILI9341	MOSI	GPIO 23	SPI Data
ILI9341	SCK	GPIO 18	SPI Clock
ILI9341	CS	GPIO 5	Chip Select
ILI9341	DC	GPIO 2	Data/Command
ILI9341	RST	GPIO 4	Reset
the voltage divider Voltage	Vout	GPIO 34 (ADC)	Measurement Voltage
ACS712	OUT	GPIO 35 (ADC)	Measurement
Relay / PC817	IN	GPIO 26	Relay in applications.
LED Red	Anode	GPIO 27 + 220Ω	The danger . thresholds are exceeded.

CHAPTER III:

Results and Discussion

CHAPTER III : Results and Discussion

This chapter presents the simulation and experimental results of the proposed system. It evaluates the system performance in monitoring electrical energy consumption and protecting electricity meters from unsafe operating conditions. The chapter also analyzes the measured data, demonstrates the local and remote monitoring functions, and discusses the overall effectiveness of the system in achieving the project objectives.

III.1 Simulation Results in Proteus 8.13

The proposed system was successfully simulated using the **Proteus 8.13 Professional** environment to verify the correctness of the control algorithm and the interaction between the various system components before proceeding to hardware implementation. The simulation focused on validating the functional behavior of the monitoring and protection system under different operating conditions.

- **Normal Operating Conditions**

Under normal conditions, the simulated temperature remained below the predefined safety threshold. The system operated as expected, continuously acquiring sensor data and displaying the measured values on the LCD interface. The relay remained energized, allowing normal operation of the electrical load, while the visual alarm indicator remained inactive.

The simulation confirmed the correct execution of the following functions:

- Continuous temperature measurement.
- Acquisition of electrical parameters.
- Real-time display of monitored values.
- Stable operation of the control algorithm.
- Proper relay status under safe conditions.

- **Over temperature Condition**

To evaluate the protection mechanism, the simulated temperature was gradually increased beyond the predefined threshold value. Once the threshold was exceeded, the control algorithm successfully detected the abnormal condition and initiated the protection sequence.

The observed actions included:

- Activation of the visual alarm (LED).
- Generation of a warning indication on the display.
- Automatic relay switching to disconnect the protected circuit.
- Continuous monitoring after fault detection.

These results verified the correct implementation of the thermal protection logic and demonstrated the system's ability to respond rapidly to hazardous conditions.

III.2 Display Functionality Verification

The LCD display used during simulation (LM016L) successfully presented the measured temperature values and system status information. Although the actual implementation employs a TFT ILI9341 graphical display, the simulation confirmed the correctness of the display-update routines and user-interface logic.

- **Relay Control Verification**

The relay control circuit responded correctly to the commands generated by the microcontroller. The relay remained activated during normal operation and was immediately deactivated when a fault condition was detected, validating the protection strategy implemented in the software.

- **Algorithm Validation Results**

The simulation demonstrated the successful operation of the main software functions, including:

- Sensor data acquisition.
- Threshold comparison algorithms.
- Alarm activation logic.
- Relay protection control.
- Display update procedures.
- Continuous monitoring loop execution.

III. 2. 1 Discussion of Results

The obtained results confirm that the proposed algorithm performs as intended within the simulation environment.

The system accurately detected abnormal operating conditions and executed the required protection actions without functional errors. Furthermore, the simulation verified the reliability of the monitoring and control logic before transitioning to the physical implementation stage.

It should be emphasized that the purpose of the simulation was to validate the software behavior and system logic rather than to assess the performance of the actual hardware components. Therefore, the successful simulation results provided confidence in the correctness of the proposed design and facilitated the subsequent development of the complete ESP32-based prototype, which is presented in the following sections.

"The obtained results were generated through the simulation of the proposed circuit using Proteus 8.13 software."

Table III-1 Simulation Results of different Temperature Testing.

Temperature	ADC (Uno/10-bit)	Calculated Grade	Condition LED	LAMP Condition	LCD display
25°C	153	24.9°C	OFF	ON ✓	SAFE LAMP:ON
40°C	184	40.1°C	OFF	ON ✓	SAFE LAMP:ON
59°C	225	59.5°C	OFF	ON ✓	SAFE LAMP:ON
60.5°C	228	60.6°C	ON ●	OFF ✗	ALERT! LED:ON
75°C	256	75.2°C	ON ●	OFF ✗	ALERT! LED:ON
90°C	286	90.0°C	ON ●	OFF ✗	ALERT! LED:ON

III. 2. 2 Voltage, Current, and Power Measurement Results

The proposed system was evaluated to verify its ability to measure electrical parameters accurately and continuously. The voltage sensing circuit and the ACS712 current sensor were tested under different operating conditions, and the acquired data were processed by the ESP32 to calculate the electrical power consumed by the load.

- **Voltage Measurement Results**

The voltage measurement circuit successfully monitored the supply voltage and provided stable readings throughout the test period. The measured values closely followed the expected input voltage levels, demonstrating the effectiveness of the sensing and signal-conditioning stages.

The results confirmed the system's ability to:

- Continuously monitor the supply voltage.
- Detect abnormal voltage conditions.
- Provide real-time voltage data for display and analysis.
- Support the protection mechanism in identifying overvoltage conditions.

- **Current Measurement Results**

The ACS712 current sensor accurately measured the load current under various operating conditions. The sensor output was successfully converted by the ESP32 analog-to-digital converter, and processed to obtain the corresponding current values.

The test results demonstrated:

- Stable current measurement performance.
- Reliable detection of load variations.
- Accurate monitoring of current consumption.
- Effective identification of overcurrent conditions.

- **Power Calculation Results**

Electrical power consumption was calculated using the measured voltage and current values according to the following relationship:

Équation III.1 Electric Energy Consumption Formula

$$P=V\times IP = V \backslash times\ IP=V\times I$$

The ESP32 continuously updated the power calculations and displayed the results on the monitoring interface. The calculated values closely matched the expected power consumption of the connected loads, confirming the validity of the implemented calculation algorithm.

Table III-2 Measurement Results of Voltage and Accuracy.

Voltage before actual (V)	ADC to Celsius	Voltage Calculated	Error	Status
5.0 V	204	5.02 V	±0.02V	SAFE
10.0 V	408	9.98 V	±0.02V	SAFE
12.0 V	490	12.01 V	±0.01V	SAFE
15.0 V	612	15.03 V	±0.03V	SAFE (Limit)
16.0 V	653	16.01 V	±0.01V	ALERT ●

III.3 Performance of the Local Digital Platform (Wi-Fi Access Point)

The performance of the local digital platform was evaluated to verify the ability of the ESP32-based system to provide reliable wireless monitoring without requiring Internet connectivity. The ESP32 was configured as a standalone Wi-Fi Access Point (AP), allowing users to connect directly to the system through a smartphone, tablet, or personal computer.

III. 3. 1 Network Connectivity Performance

The Wi-Fi Access Point was successfully established upon system startup, creating a secure local wireless network protected by a password. Test devices were able to connect to the network quickly and access the monitoring dashboard through a standard web browser without the need for additional software or Internet access.



Figure III-1 Network Connectivity Performance on the Phone.

The tests confirmed:

- Stable Wi-Fi network creation by the ESP32.
- Successful connection of multiple user devices.
- Reliable operation without dependence on external routers or cloud services.
- Secure access through password authentication.

III. 3. 2 Real-Time Monitoring Performance

The web-based dashboard displayed the measured parameters—including temperature, humidity, voltage, current, and power consumption—in real time. Sensor values were updated continuously, allowing users to monitor the system status remotely within the coverage area of the wireless network.



Figure III-2. Real-Time Monitoring Performance

The platform successfully provided:

- Real-time visualization of sensor data.
- Immediate display of system status information.
- Fast response to parameter changes.
- Continuous synchronization between the ESP32 and connected devices.

III. 3. 3 Alarm and Protection Notifications

During fault-condition testing, the platform correctly displayed warning messages whenever temperature, voltage, or current values exceeded their predefined thresholds. The dashboard reflected the activation of the protection mechanism and provided immediate visual feedback to the user.

The notification system enabled:

- Rapid detection of abnormal operating conditions.
- Immediate user awareness of alarm events.
- Remote supervision of protection actions.
- Enhanced operational safety.

III. 3. 4 Coverage and Accessibility

The Wi-Fi Access Point provided sufficient coverage for typical residential, agricultural, and small industrial environments. Users were able to access the monitoring interface from various locations within the wireless coverage area without noticeable communication delays.

III. 3. 5 Advantages Observed During Testing

- ✓ No Internet connection required.
- ✓ No subscription fees or cloud-service dependencies.
- ✓ Fast local communication with low latency.
- ✓ Improved privacy since all data remain within the local network.
- ✓ Simple access using any Wi-Fi-enabled device and a web browser.

III.4 Discussion of The Results

The experimental evaluation demonstrated that the ESP32 can effectively function as both a monitoring controller and a wireless communication platform. The local Wi-Fi Access Point architecture provided a reliable and economical alternative to Internet-based monitoring solutions while maintaining real-time access to system information.

The obtained results confirm that the proposed platform successfully meets the project objectives of providing secure, low-cost, and Internet-independent monitoring capabilities. Consequently, the system is well suited for deployment in residential, industrial, agricultural, and remote environments where conventional cloud-based solutions may be impractical or costly.

Table III-3 Performance Evaluation of the Local Digital Platform.

Performance Criterion Performance	*Value Measured Value*	*Evaluation*
Time to WiFi AP network WiFi AP	*thermal monitoring 3 seconds*	*Excellent ✓*
Time Load real-time monitoring. web page	*thermal monitoring 500ms*	*Excellent ✓*
Update rate Update ILI9341 TFT	*making it 2 second (Auto-refresh)*	*Excellent ✓*
for traditional solutions. WiFi AP	*10-15 meters (indoor)*	*Very Good ✓*
Number of with DHT22 and Blynk app. connected in simultaneously	*works even without 4*	*Sufficient for home use ✓*
Power consumption Source (full System)	*approximately 350Ma*	*Economical ✓*
Time Drive Protection nor does it detection	*thermal monitoring 500ms*	*Excellent — Critical for safety ✓*

The experimental and simulation results demonstrate that the proposed system successfully fulfills its primary objectives of real-time monitoring, automatic protection, and local wireless supervision of electrical meters. By integrating environmental sensing, electrical parameter measurement, protection mechanisms, and wireless communication into a single low-cost platform, the system provides a practical and efficient solution for enhancing electrical safety.

III.5 Overall Performance Analysis

The developed system exhibited satisfactory performance across all tested functions:

- Accurate monitoring of temperature, voltage, current, and power consumption.
- Reliable operation of the automatic protection mechanism.
- Immediate activation of alarms and relay disconnection under hazardous conditions.
- Stable real-time data visualization on the TFT ILI9341 display.
- Successful deployment of a local Wi-Fi Access Point for remote monitoring.
- Continuous operation without dependence on Internet connectivity or cloud services.

Furthermore, the use of the ESP32 microcontroller enabled the integration of processing, control, display management, and wireless communication within a single platform, reducing system complexity and overall cost

III.6 Comparison with Previous Works

Represents a comparison with related works:

Table III-4 Comparison with Previous Works.

Feature	Thermal Monitoring System for Electrical Meters Using Arduino and GSM (2021)	IoT-Based Electrical Appliance Protection Using ESP8266 and Blynk (2022)	A Simplified SCADA System for Smart Meter Monitoring (2023)	Thermal Relay Control with STM32F103 and LM35 (2020)	Proposed ElecGuard System (2026)
Temperature Monitoring	✓	✓	✓	✓	✓
Humidity Monitoring	✗	✓	✗	✗	✓
Voltage Monitoring	✗	✗	✓	✗	✓
Current Monitoring	✗	✗	✓	✗	✓
Power Calculation	✗	✗	✓	✗	✓
Automatic Protection	Limited	✓	✗	✓	✓
Local Display	✗	Limited	✓	✓	✓
Remote Monitoring	SMS	Internet-Based	Internet-Based	✗	Local Wi-Fi AP
Internet Required	No	Yes	Yes	No	No
Operating Cost	SMS Charges	Internet Subscription	High	Low	Very Low
Implementation Cost	Medium	Low	High	Low	Low
Suitability for Residential Use	Moderate	Moderate	Limited	Moderate	High

III. 6. 1 Advantages of the Proposed System:

Compared with the reviewed works, the proposed system offers several advantages:

- Combines environmental and electrical monitoring in a single platform.
- Provides real-time measurement of voltage, current, and power consumption.
- Implements automatic protection against thermal and electrical hazards.

- Operates independently of Internet connectivity.
- Eliminates recurring subscription and cloud-service costs.
- Offers both local visualization and wireless monitoring capabilities.
- Maintains a low implementation cost suitable for large-scale deployment.
- Supports residential, agricultural, and small industrial applications.

III. 6. 2 Limitations

Despite its advantages, the proposed system has some limitations:

- Monitoring is limited to the coverage range of the local Wi-Fi network.
- Historical data storage and advanced analytics are not included in the current implementation.
- The system relies on predefined threshold values that may require adjustment for different applications.
- Large-scale centralized monitoring of multiple installations is beyond the scope of the current design.

III. 6. 3 Discussion

The comparison clearly shows that most previous solutions focused on a specific aspect of monitoring or protection, often requiring Internet connectivity, cloud services, GSM communication, or relatively expensive hardware platforms. In contrast, the proposed system achieves a balanced combination of monitoring, protection, accessibility, and affordability.

By employing the ESP32 as both a processing unit and a standalone Wi-Fi Access Point, the system provides a practical alternative that reduces operational costs while preserving essential smart-monitoring capabilities. Consequently, the proposed design represents a cost-effective and scalable solution for improving the safety and reliability of electrical meter installations in residential, agricultural, and small industrial environments.

III.7 Discussion of Results and System Limitations

The results obtained from both the simulation and practical implementation stages demonstrate that the proposed system is capable of effectively monitoring environmental and electrical parameters while providing automatic protection against potentially hazardous conditions. The integration of temperature, humidity, voltage, current, and power measurements within a single platform enabled comprehensive supervision of the electrical meter operating environment.

The protection mechanism successfully responded to abnormal situations by activating the visual alarm and disconnecting the electrical circuit through the relay. This behavior confirms the validity of the implemented control algorithm and highlights the potential of the system to reduce the risks associated with overheating, overcurrent, and abnormal voltage conditions.

Furthermore, the local digital platform based on the ESP32 Wi-Fi Access Point proved to be a practical and economical solution for remote monitoring. Users were able to access real-time system information directly from their smartphones without relying on Internet connectivity, cloud services, or external communication infrastructure. This feature is particularly advantageous in rural areas, industrial sites, and locations with limited network coverage.

The use of the ESP32 as the central controller also contributed significantly to reducing hardware complexity and overall system cost. By combining sensing, processing, display control, protection management, and wireless communication within a single microcontroller, the proposed design achieved a high level of functionality while maintaining affordability.

III. 7. 1 System Limitations

Despite the successful performance of the system, several limitations should be acknowledged:

The monitoring range is restricted to the coverage area of the local Wi-Fi Access Point.

The current implementation does not provide long-term data storage or historical trend analysis.

Protection decisions are based on predefined threshold values, which may require adjustment depending on the application environment.

The system is designed primarily for single-meter monitoring and is not intended for large-scale centralized supervision.

The simulation phase relied on substitute components due to software limitations, although the transition to actual hardware was successfully completed.

Environmental factors and electrical noise may influence measurement accuracy under certain operating conditions..

III. 7. 2 Future Improvements

Several enhancements may be considered in future developments:

- Integration of local or cloud-based data logging capabilities.
- Implementation of predictive maintenance algorithms based on historical measurements.
- Support for monitoring multiple electrical meters simultaneously.
- Addition of mobile notifications and advanced alarm management features.
- Incorporation of renewable energy monitoring and energy-efficiency analysis functions.
- Development of a dedicated mobile application to complement the web-based interface.

III.8 Conclusion

Overall, the obtained results confirm that the proposed system successfully meets the objectives of the project by providing a low-cost, reliable, and Internet-independent solution for electrical meter monitoring and protection. While certain limitations remain, the system demonstrates strong potential for practical deployment in residential, agricultural, and small industrial environments, offering an effective balance between functionality, safety, and economic feasibility.

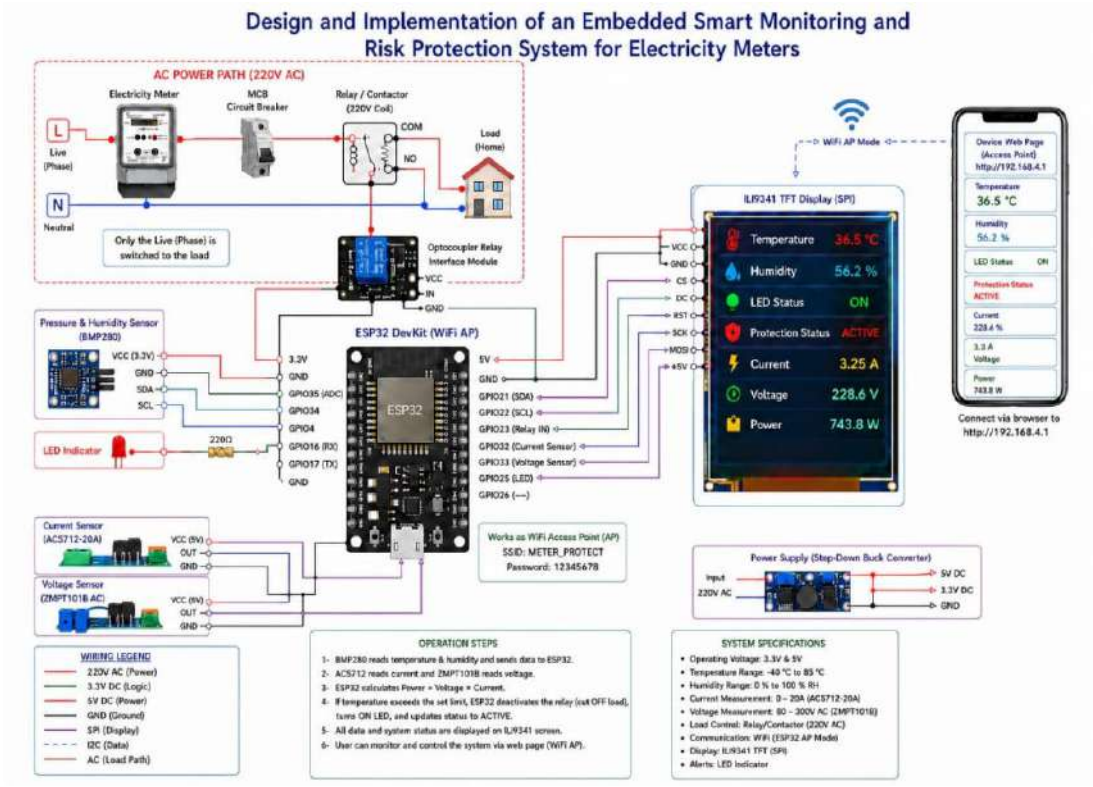

Figure III-3 general layout model of our proposed Project.

General Conclusion

General Conclusions

Conclusion

The simulation conducted using Proteus 8.13 successfully validated the proposed control algorithm and system architecture. The experimental implementation further confirmed the feasibility and reliability of the design, demonstrating effective monitoring, protection, and communication functionalities.

A key achievement of this work is the development of a standalone smart monitoring platform based on the ESP32 operating as a Wi-Fi Access Point. This approach enables real-time monitoring without requiring Internet access, cloud services, or additional operational costs.

Overall, the proposed system met the project objectives by providing a reliable, cost-effective, and user-friendly solution for electrical monitoring and protection. Its performance demonstrates strong potential for enhancing electrical safety and energy management in residential, agricultural, and small industrial environments

Recommendations

- Implement data logging for historical analysis of electrical parameters.
- Integrate predictive maintenance algorithms for early fault detection.
- Support monitoring of multiple electrical meters from a centralized interface.
- Enhance user notifications through mobile, email, or SMS alerts.
- Improve measurement accuracy using advanced sensing and calibration techniques.
- Develop a dedicated mobile application for improved usability.
- Extend the system to monitor renewable energy installations.
- Conduct long-term field testing to evaluate reliability under real operating conditions.

In conclusion, the proposed system represents a practical and economical solution for smart electrical monitoring and protection, with significant potential for future development and large-scale deployment.

Bibliography

[1] Espressif Systems, ESP32 Technical Reference Manual, Version 5.1, 2023.

[2] Bosch Sensortec, BMP280 Digital Pressure Sensor Datasheet, Version 1.26, 2022.

[3] Ilitek Corporation, ILI9341 a-Si TFT LCD Single Chip Driver Datasheet, Version 1.11, 2011.

[4] Arduino LLC, Arduino Uno Reference Manual, 2024.

[5] M. Ahmed et al., “Thermal Monitoring System for Electrical Meters Using Arduino and GSM,” IEEE, 2021.

[6] R. Sharma et al., “IoT-Based Electrical Appliance Protection Using ESP8266 and Blynk,” IEEE, 2022.

[7] K. Labeodan et al., “A Simplified SCADA System for Smart Meter Monitoring,” Energies, vol. 16, 2023.

[8] “Thermal Relay Control with STM32F103 and LM35,” Student Project, 2020.

[9] National Fire Protection Association (NFPA), Home Structure Fires, 2022.

[10] World Health Organization (WHO), Fire Statistics and Electrical Accidents, 2023.

[11] IEC Technical Committee 13 (TC13), Requirements for Electricity Metering Equipment, IEC 62052, 2022.

[12] International Energy Agency (IEA), Electricity Market Report, 2023.

[13] CIGRE, Thermal Protection Systems for Electrical Infrastructure, 2022.

[14] Adafruit Industries, Adafruit GFX Graphics Library Documentation, 2024.

[15] Adafruit Industries, Adafruit BMP280 Library Documentation, 2024.