الجمهوريـــــــة الجزائريـــــــة الديمقراطيـــــــة الشعبيـــــــة

PEOPLE'S DEMOCRATIC REPUBLIC OF ALGERIA

وزارة التـــــــعليـــــم العـــــــالي والبـــــــحث العـــــلـــمـــــي

Ministry of Higher Education and Scientific Research

جامعـــــــــة قاصـــــــدي مربـــــــاح – ورقـــــلـــــة–

University of Kasdi Merbah -Ouargla–

كلية التكنولوجيا الحديثة للمعلومات والاتصال

Faculty of New Technologies of Information and Communication

قسم الإلكترونيك والاتصالات

Department of Electronics and Telecommunications

DISSERTATION

Dissertation presented for obtaining the MASTER degree

Specialty: Telecommunications systems

Presented by:

OULEDSALEM ABIR /GARECH OUAZNA

DJERIDANE SANA

Theme

RADIO OVER FIBER (ROF) LINK DESIGN FOR COMMUNICATION SYSTEM

Publiclysustainedon:08/06/2026 before

the jury composed of:

Mr.AOUNALLAH Naceur	Professor	U.K.M.O	President
Mr.OTMANI Hamza	MCA	U.K.M.O	Supervisor
Mr.BENATMENE Khaled	MCB	U.K.M.O	Examiner

2025 -2026

Dedication

Thanks and praise to God Almighty first for the blessing of patience and the ability to complete this work. Praise be to God for these blessings.

With all feelings of love, respect, and gratitude, I dedicate this humble work to my beloved parents, who have always been my source of strength and support, and who made countless sacrifices and sincere prayers for me to reach this stage of success.

I also dedicate this work to my dear family, whose encouragement and support accompanied me throughout my academic journey and gave me the motivation to continue despite all difficulties.

We would like to extend our sincere thanks to our thesis supervisor, **Dr. Otmani Hamza**, for his continuous guidance, invaluable advice, and support throughout the process of this research. His patience and dedication have been a source of inspiration and motivation for us to push beyond our limits.

We are also honored to express our sincere thanks to the members of the jury, **Pr. Aounallah Naceur** and **Dr. Benatmene Khaled** , for accepting to examine and evaluate this work and for their valuable time and consideration.

Special thanks and appreciation go to my teachers, who generously shared their knowledge, guidance, and valuable advice, contributing greatly to the development of my skills and learning experience.

I would also like to dedicate this work to my friends and classmates, who shared with me moments of hard work, perseverance, and encouragement during this journey.

Finally, I express my sincere gratitude to everyone who contributed, directly or indirectly, to the completion of this work, and to all those who believed in me and motivated me to pursue my goals and ambitions.

I proudly dedicate the fruit of this effort, hoping for continued success and a bright future ahead.

GARECH OUAZNA ***OULEDSALEM ABIR***

DJERIDANE SANA

Acknowledgments

First and foremost, we would like to express our sincere gratitude to Almighty God for giving us the strength, patience, and determination to accomplish this work successfully.

We would like to express our deepest appreciation to our supervisor for his valuable guidance, continuous support, constructive advice, and encouragement throughout the realization of this dissertation. His experience and assistance were of great importance in completing this work.

We would also like to thank all the teachers and staff members of our department for the knowledge and education they provided during our academic journey.

Special thanks are extended to our families for their endless support, patience, motivation, and encouragement throughout our studies. Their confidence and sacrifices have always been a source of inspiration.

Finally, we would like to thank everyone who contributed directly or indirectly to the completion of this dissertation.

ABSTRACT

The continuous growth of modern telecommunication services and the increasing demand for high-speed data transmission have encouraged the development of advanced optical communication technologies capable of providing large bandwidth, low attenuation, and high transmission reliability. Among these technologies, Radio over Fiber (RoF) has emerged as an efficient solution that combines the advantages of optical fiber communication with wireless radio-frequency systems. RoF technology enables the transport of radio signals over optical fibers between centralized stations and remote antenna units, offering simplified network architecture, reduced operational costs, and improved communication performance. This dissertation presents a theoretical and practical study of a Radio over Fiber communication system using OptiSystem software. The work focuses mainly on evaluating the impact of optical fiber length and laser launch power on the transmission quality and overall system performance. In addition, Fiber Bragg Grating (FBG) technology is introduced as a compensation technique to improve signal stability and reduce transmission impairments caused by chromatic dispersion and nonlinear effects. The proposed RoF system was designed and simulated using several optical and electrical components, including CW lasers, Mach–Zehnder modulators, single-mode optical fibers, PIN photo detectors, low-pass filters, and BER analyzers. The system performance was analyzed using important quality indicators such as Quality Factor (Q-Factor), Bit Error Rate (BER), and Eye Diagram analysis under different transmission scenarios. The obtained results demonstrated that increasing the transmission distance causes significant signal degradation due to attenuation and chromatic dispersion. The system maintained excellent performance at transmission distances of 50 km and 80 km, while noticeable degradation appeared at 100 km and complete system failure occurred at 160 km. The study also showed that moderate laser launch powers between 1 dBm and 12 dBm provided optimal system performance, whereas excessive power levels introduced nonlinear distortion effects that degraded communication quality. Overall, the results confirm the effectiveness of Radio over Fiber technology for high-speed optical communication systems and highlight the importance of selecting optimal transmission parameters to ensure stable and reliable system performance.

Keywords: Radio over Fiber, Optical Fiber Communication, OptiSystem, Bit Error Rate, Fiber Bragg Grating

RÉSUMÉ

Le développement rapide des services de télécommunication modernes ainsi que l'augmentation continue de la demande en transmission de données à haut débit ont conduit à l'émergence de technologies de communication optique capables d'offrir une grande bande passante, une faible atténuation et une transmission fiable. Parmi ces technologies, le système Radio over Fiber (RoF) représente une solution performante qui combine les avantages des communications optiques et des systèmes radiofréquences sans fil. Cette technologie permet la transmission des signaux radio à travers les fibres optiques entre une station centrale et des unités distantes, tout en assurant une architecture réseau simplifiée, une réduction des coûts d'exploitation et une amélioration de la qualité de transmission. Ce mémoire présente une étude théorique d'un système de communication Radio over Fiber à l'aide du logiciel OptiSystem. Le travail est principalement consacré à l'évaluation de l'impact de la longueur de la fibre optique et de la puissance du laser sur la qualité de transmission et les performances globales du système. En outre, la technologie Fiber Bragg Grating (FBG) a été utilisée comme méthode de compensation afin d'améliorer la stabilité du signal et de réduire les effets de dispersion chromatique et des phénomènes non linéaires. Le système RoF proposé a été conçu et simulé à l'aide de plusieurs composants optiques et électriques tels que les lasers CW, les modulateurs Mach–Zehnder, les fibres optiques monomodes, les photodétecteurs PIN, les filtres passe-bas et les analyseurs BER. Les performances du système ont été évaluées à travers plusieurs indicateurs importants, notamment le facteur de qualité (Q-Factor), le taux d'erreur binaire (BER) et le diagramme de l'œil. Les résultats obtenus montrent que l'augmentation de la distance de transmission entraîne une dégradation importante du signal à cause de l'atténuation et de la dispersion chromatique. Le système conserve de très bonnes performances pour des distances de 50 km et 80 km, tandis qu'une dégradation significative apparaît à 100 km et une défaillance totale du système est observée à 160 km. L'étude a également démontré que les puissances laser modérées comprises entre 1 dBm et 12 dBm assurent des performances optimales, alors que des puissances excessives provoquent des distorsions non linéaires qui détériorent la qualité de transmission. Dans l'ensemble, les résultats obtenus confirment l'efficacité de la technologie Radio over Fiber pour les systèmes de communication optique à haut débit et soulignent l'importance du choix optimal des paramètres de transmission afin de garantir des performances stables et fiables.

Mots-clés : Radio over Fiber, Communication par fibre optique, OptiSystem, Taux d'erreur binaire, Fiber Bragg Grating

الملخص

أدى التطور السريع لخدمات الاتصالات الحديثة والارتفاع المستمر في الطلب على نقل البيانات ذات التدفق العالي إلى ظهور تقنيات اتصالات بصرية قادرة على توفير عرض نطاق واسع، وتوهين منخفض، ونقل موثوق للمعلومات. ومن بين هذه التقنيات، يُعد نظام الراديو عبر الألياف البصرية (Radio over Fiber - RoF) حلاً فعالًا يجمع بين مزايا الاتصالات البصرية وأنظمة الترددات الراديوية اللاسلكية. تتيح هذه التقنية نقل الإشارات الراديوية عبر الألياف البصرية بين المحطة المركزية والوحدات البعيدة، مع ضمان بنية شبكية مبسطة، وتقليل تكاليف التشغيل، وتحسين جودة الإرسال .

تقدم هذه المذكرة دراسة نظرية وعملية لنظام اتصال يعتمد على تقنية الراديو عبر الألياف البصرية باستخدام برنامج OptiSystem.ويركز العمل أساسًا على تقييم تأثير طول الليف البصري وقدرة الليزر على جودة الإرسال والأداء العام للنظام. بالإضافة إلى ذلك، تم استخدام تقنية Fiber Bragg Grating (FBG) كوسيلة تعويض لتحسين استقرار الإشارة وتقليل تأثيرات التشتت اللوني والظواهر غير الخطية.

تم تصميم ومحاكاة نظام RoF المقترح باستخدام عدة مكونات بصرية وكهربائية، مثل ليزرCW ، ومعدلات–Mach Zehnder، والألياف البصرية أحادية النمط، والكواشف الضوئيةPIN ، ومرشحات التمرير المنخفض، ومحللات معدل الخطأ الثنائي .BER وقد تم تقييم أداء النظام اعتمادًا على مجموعة من المؤشرات المهمة، من بينها عامل الجودة(Q-Factor) ، ومعدل الخطأ الثنائي(BER) ، ومخطط العين.(Eye Diagram)

أظهرت النتائج المتحصل عليها أن زيادة مسافة الإرسال تؤدي إلى تدهور ملحوظ في الإشارة بسبب التوهين والتشتت اللوني. حيث حافظ النظام على أداء جيد جدًا عند مسافات 50 كم و80 كم، بينما ظهر تدهور واضح عند 100 كم، وتمت ملاحظة فشل كامل للنظام عند 160 كم. كما بينت الدراسة أن قدرات الليزر المتوسطة، المحصورة بين 1 dBm وdBm12 ، توفر أداءً مثاليًا، في حين أن القدرات العالية تؤدي إلى تشوهات غير خطية تؤثر سلبًا على جودة الإرسال.

وبصفة عامة، تؤكد النتائج المتوصل إليها فعالية تقنية الراديو عبر الألياف البصرية في أنظمة الاتصالات البصرية ذات التدفق العالي، وتبرز أهمية الاختيار الأمثل لمعاملات الإرسال من أجل ضمان أداء مستقر وموثوق.

الكلمات المفتاحية: الراديو عبر الألياف البصرية، الاتصالات عبر الألياف البصرية، OptiSystem، معدل الخطأ الثنائي، Fiber Bragg Grating.

Contents table

Dedication I

Acknowledgments II

ABSTRACT.....III

RÉSUMÉ..... IV

V..... الملخص

Content Table..... VI

List of Tables.....X

List of Figures..... XI

List of acronyms.....XIII

GENERAL INTRODUCTION.....1

Chapter I: General information on Radio over fiber (RoF) system

I.1 INTRODUCTION: 6

I.2 Fundamentals And Components Of a Radio over Fiber (RoF) Link : 6

I.2.1 Concept Of ROF : 7

I.2.2 Architecture Of ROF : 7

I.3 Application Of Radio On Fiber 8

I.4 Advantages Of Radio Over Fiber System 9

I.5 Disadvantages Of a Radio Over Fiber System 9

I.6 Introduction Of Different Components Used In RoF System 9

I.6.1 Wavelength Division Multiplexing: 9

I.6.2 Optical Add-drop Multiplexer 10

I.6.3 Erbium doped fiber amplifier 10

I.6.4 Laser diode : 10

I.7 Optical transmitting unit (radio to optical conversion) 10

I.7.1 Fiber Chromatic Dispersion and the Fading Phenomenon : 11

I.7.2 Advanced Dispersion Mitigation schemes in transmitter Design : 11

I.8 Light sources for ROF (laser diodes: DFB ,VCSEL) 12
I.9 Modulation Techniques in radio over fiber (RoF) 15
I.9.1 Direct Modulation : 15
I.9.2 External Modulation : 15
I.10 The characteristics of optical fiber in Radio over fiber (RoF): 17
I.11 Conclusion : 18
Chapter II: Fundamentals of Optical Fiber
II.1 Introduction 21
II.2 History 21
II.3 Definition 21
II.4 Description of Optical Fiber 22
II.4.1 The Core 22
II.4.2 The Optical Cladding 22
II.5 Light Guiding Condition 23
II.6 Different Types of Optical Fiber 23
II.6 .1Single-Mode Fiber 23
II.6 .2Multimode Fiber 23
II.6 .2.1 Step-Index Multimode Fiber **24**
II.6 .2.2 Graded-Index Multimode Fiber.....24
II.6 .3Performance of the Three Types of Optical Fibers 25
II.7 Principle of Optical Propagation and Transmission 26
II.8 Optical Fiber Communication System 26
II.8.2 Optical Transmitters and Receivers 27
II.8.2.1 Optical Transmitters 27
II.8.2.2 Optical Receivers.....27
II.8.3 Multiplexer and Démultiplexeurs 27
II.8.3.1 Multiplexer 27

II.8.3.2 Démultiplexeur.....27
II.8.4 Optical Multiplexing Techniques 27
II.8.4.1 OFDM Technique 27
II.8.4.2 OTDM Technique 28
II.8.5 Optical Sources 28
II.8.5.1 Laser Diode (LD) 29
II.8.5.2 Light Emitting Diode (LED).....29
II.8.6 Photodiode 29
II.8.7 PIN Photodiode 30
II.8. 8Characteristics of Optical Fiber 30
II.8. 8.1 Numerical Aperture of an Optical Fiber 30
II.8. 8.2 Attenuation.....31
II.8. 8.3 Causes of Signal Attenuation in Fibers.....32
II.9 Application Areas of Optical Fiber 33
II.9.1 Advantages of Optical Fiber 34
II.9.2 Disadvantages of Optical Fiber 35
II.10 Fiber Coupling …….....…35
II.11Optical Networks …….....35
II.11 .1All-Optical Network (Transparent Network)…….....….35
II.11 .2Non-All-Optical Network (Opaque Network).. 36
II.12Different Networks Covered by Optical Fiber 36
II.12.1Access Network 37
II.12.2Metropolitan Network 37
II.12.3Core Network 37
II.13Geographic Classification of Networks 37
II.13.1Wide Area Network (WAN) 37
II.13.1.1Terrestrial Networks.....37

II.13.1.2Submarine Networks.....37
II.13.2Metropolitan Networks 37
II.13.3Local Area Networks 38
II.14Comparison Between the Three Types of Networks 38
II.15Conclusion 38
Chapter III: Simulation and Results Analysis
III.1Introduction : 40
III.2OptiSystem Software Definition 40
III.3Introduction to OptiSystem Software 40
III.4 OptiSystem Description 41
III.5 User-Defined Components 42
III.6 Advantages Key Features of OptiSystem Software.....43
III.7 Transmission Quality Criteria 44
III.7.1 Quality Factor 44
III.7.2 Bit Error Rate(BER) 44
III.7.3 The eye diagram 45
III.8 OptiSystem Applications 45
III.9 System Model and Design:.....46
III.10 Conclusion :.....66
General Conclusion.....67
References.....70

List of Tables

CHAPTER I General information on Radio over fiber (RoF) system

Table 1:DFB vs VCSEL.....14

Chapter II: Fundamentals of Optical Fiber

Table 2: Comparison Between Multimode and Single-Mode Fiber.....26

Table 3: Different Types of Optical Networks 38

Chapter III: Simulation and Results Analysis

Table 4:Simulation parameters 46

Table 5:Results table at 50 km.....49

Table 6:Results table at 80 km.....50

Table 7:Results table at 100 km.....52

Table 8:Results table .. at 160 km.....53

Table 9:Results table at _10 dBm.....54

Table 10:Results table at _5 dBm.....55

Table 11:Results table at _1 dBm.....56

Table 12:Results table at 1 dBm.....57

Table 13:Results table at 5 dBm.....58

Table 14:Results table at 12 dBm.....59

Table 15:Results table at 20 dBm.....60

Table 16:Results table at 25 dBm.....61

Table 17:Comparative Table 62

Table 18:Measured Q-factor Different lengths.....62

Table 19:Measured Q-factor for different power levels.....63

Table 20:Numerical results PIN as receiver.....64

List of Figures

CHAPTER I General information on Radio over fiber (RoF) system

Figure 1:RoF System Architecture 6

Figure 2:The Radio over Fiber System Concept 7

Figure 3:The Radio over Fiber System Architecture 8

Figure 4:Wavelength division multiplexing.....10

Figure 5: Components of a DFB Laser.....13

Figure 6:Simplified VeSEL structure.....14

Figure 7:Layout of Mach Zehnder modulator 16

CHAPTER II Fundamentals of Optical Fiber

Figure 8:Description of the Optical Fiber.....22

Figure 9:Single-Mode Fiber.....23

Figure 10:Step-Index Multimode Fiber.....24

Figure 11:Graded-Index Multimode Fiber.....24

Figure 12:Attenuation in Step-Index Fibers.....25

Figure 13:Performance of the Three Fiber Types 25

Figure 14:Diagram of an Optical Link 26

Figure 15:Structure of the Photodiode.....30

Figure 16:Numerical Aperture of an Optical Fiber.....31

Figure 17:Attenuation in Optical Fibers.....32

Figure 18:Some Examples of Optical Fiber Applications.....34

Figure 19:Different Parts of an Optical Network 36

CHAPTER III Simulation and Results Analysis

Figure 20:OPTISYSTEM7.0Windows 41

Figure 21:Component library 41

Figure 22:Graphical user interface (GUI) 42

Figure 23:Parameter component modification. 44

Figure 24:The eye diagram 45

Figure 25:Block diagram of the proposed RoF system model 46

Figure 26:Simulation layout of the 4 – channel RoF transmitter in optisystem 47

Figure 27:Optical spectrum of the 4-channel WDM signal at the transmitter output 47

Figure 28:System Link Description.....48

Figure 29:The receiver (complete) System Simulation 48

Figure 30:Eye Diagram at 50 km.....49

Figure 31:Simulation setup.....49

Figure 32:Simulation setup..... 50

Figure 33:Diagram Eye at 80 km.....50

Figure 34:Simulation setup..... 51

Figure 35:Dagram Eye at 100 km.....51

Figure 36:Simulation setup 53

Figure 37:Diagram Eye at 160 km.....53

Figure 38:Simulation setup 54

Figure 39:Diagram Eye at power -10 dBm.....54

Figure 40:Simulation setup..... 55

Figure 41:Diagram Eye at power -5 dBm.....55

Figure 42:Simulation setup..... 56

Figure 43:Diagram Eye at power -1 dBm.....56

Figure 44:Simulation setup 57

Figure 45:Diagram Eye at power 1 dBm.....57

Figure 46: Simulation setup..... 58

Figure 47: Diagram Eye at power 5 dBm.....58

Figure 48: Simulation setup 59

Figure 49: Diagram Eye at power 12 dBm.....59

Figure 50: Simulation setup..... 60

Figure 51: Diagram Eye at power 20 dBm.....60

Figure 52:Simulation **setup** 61

Figure 53: Diagram Eye at power 25 dBm.....61

Figure 54: Simulation schematic of RoF receiver part with fiber Bragg grating.....64

Figure 55: (a) PIN Response before FBG over 50 Km / (b) PIN response after FBG over 50 km.....64

List of acronyms

BER Bit error rate

BS base station

CD chromatic dispersion

CS central station

DAS distributed antanna system

dBm decibel –miliwatt

DCF dispersion compensating fiber

DFB Distributed feedback (laser)

DSB double –sideband (modulation)

EDFA erbium doped fiber amplifier

EMI electromagnetic interference

FBG fiber Bragg grating

Gbps Gigabits per second

GHz Gigahertz

GPON gigabit passive optical Network

GUI graphical user interface

LAN local area network

LD laser diode

LED light emitting diode

MAN metropolitan area network

MMF multimode fiber

OADM optical add-drop multiplexer

OCS optical carrier suppression

OFDM Orthogonal frequency division multiplexing

OLT optical line terminal

ONT optical network termination

ONU optical network Unit

OSSB Optical single – sideband

OTDM Optical time division multiplexing

PD photo- detector / photodiode

PIN positive – intrinsic – negative (photodiode)

RAU remote antenna unit

RF Radio frequency

RFI radio frequency interference

ROF Radio over fiber

SMF single – mode fiber

VCSEL vertical –cavity surface –emitting laser

WAN wide area network

WDM Wavelength Division Multiplexing

GENERAL INTRODUCTION

GENERAL INTRODUCTION

The rapid growth of modern telecommunication systems and the increasing demand for high-speed internet services have led to the development of advanced transmission technologies capable of supporting large amounts of data with high reliability and low latency. Traditional copper-based communication systems are no longer sufficient to satisfy the requirements of modern broadband applications due to their limited bandwidth and high attenuation. Consequently, optical fiber communication has become the backbone of modern communication networks because of its high bandwidth capacity, low transmission losses, immunity to electromagnetic interference, and ability to support long-distance transmission.

At the same time, wireless communication technologies have experienced significant evolution, particularly with the emergence of broadband mobile networks and high-frequency applications. This evolution created the need for hybrid communication systems capable of combining the flexibility of wireless communication with the advantages of optical fiber transmission. Among the most promising technologies developed for this purpose is Radio over Fiber (RoF), which enables the transmission of radio frequency (RF) signals through optical fibers between a central station and remote antenna units.

RoF technology offers several important advantages such as simplified network architecture, reduced operational costs, centralized signal processing, improved bandwidth efficiency, and enhanced transmission quality. These characteristics make RoF systems highly suitable for next-generation communication networks including 5G systems, broadband wireless access, and high-speed optical wireless communication infrastructures.

Despite the numerous advantages provided by Radio over Fiber systems, their performance remains highly affected by several transmission impairments associated with optical fiber communication. Among the most important limitations are chromatic dispersion, attenuation, nonlinear optical effects, and noise accumulation during long-distance transmission.As the optical fiber length increases, signal attenuation and dispersion become more significant, leading to degradation in signal quality and deterioration in the system’s overall performance. Similarly,

increasing the laser launch power beyond optimal operating levels introduces nonlinear effects inside the fiber, which negatively affect the Quality Factor (Q-Factor) and increase the Bit Error Rate (BER).

Therefore, it becomes necessary to analyze the influence of optical transmission parameters on the behavior of RoF systems and determine the optimal operating conditions capable of ensuring stable and efficient communication performance.

The main objective of this dissertation is to study and evaluate the performance of a Radio over Fiber communication system using OptiSystem software under different transmission conditions.

The specific objectives of this work are summarized as follows:

- To study the fundamental principles of optical fiber communication systems and Radio over Fiber technology.
- To analyze the impact of optical fiber length on transmission quality using performance indicators such as BER, Q-Factor, and Eye Diagram analysis.
- To investigate the effect of laser input power variation on the performance and stability of the RoF system.
- To determine the optimal operating power range that ensures maximum transmission efficiency.
- To improve system performance using Fiber Bragg Grating (FBG) techniques for dispersion compensation and signal quality enhancement.

This dissertation contributes to the understanding and optimization of Radio over Fiber systems through simulation and performance analysis. The major contributions of this work can be summarized as follows:

- Design and simulation of a multi-channel RoF communication system using OptiSystem software.
- Detailed analysis of the impact of transmission distance on system quality and signal integrity.

• Investigation of the relationship between laser launch power and optical communication performance.

• Identification of the optimal operating region for the proposed optical communication link.

• Enhancement of system performance using Fiber Bragg Grating technology to mitigate dispersion and nonlinear impairments.

In this work, the proposed Radio over Fiber system is designed and simulated using OptiSystem software. The simulation model consists of several optical and electrical components including pseudo-random bit generators, CW lasers, Mach–Zehnder modulators, single-mode optical fibers, photodetectors, low-pass filters, and BER analyzers.

The system performance is evaluated under different operating scenarios by varying two main parameters: optical fiber length and laser launch power. Several quality indicators are used to analyze the transmission efficiency, including Q-Factor, BER, and Eye Diagram measurements.

Furthermore, Fiber Bragg Grating (FBG) technology is incorporated into the optical link in order to compensate for dispersion effects and improve signal quality at higher transmission powers.

This dissertation is organized into three main chapters:

Chapter One presents the general concepts of Radio over Fiber systems, including their architecture, operating principles, advantages, limitations, and applications in modern telecommunication systems.Chapter Two focuses on optical fiber communication systems and discusses optical fibers, multiplexing techniques, optical sources, photodetectors, optical networks, and the main characteristics affecting optical signal transmission.Chapter Three is dedicated to the practical simulation and performance analysis of the proposed RoF system using OptiSystem software. This chapter presents the simulation setup, obtained results, system evaluation, and discussion of the influence of transmission distance and laser input power on communication quality.

Chapter I:

General information on Radio over fiber (RoF) system

I.1 INTRODUCTION:

Optical communication is a from of communication that uses light as the transmission medium , Radio over fiber [1]. is an analog optical link transmitting modulated RF signal . it serves to transmit the RF signal to and form central station to base station . the main requirements of radio over fiber link architecture are duplex operation (downlink – uplink) reasonable length . need a few millimeter – wave components only in the base station and also need of only few high performance optical components.

RoF systems are now being used for enhanced cellular coverage inside buildings . it has introduced as a cost effective approach for reducing radio system costs because it simplifies the remote antenna sites and enhances the sharing of expensive radio equipment located at central station . the frequencies of the radio signals distributed by RoF system span a wide range (usually in the GHz region) and depend on the nature of the applications

I.2 Fundamentals And Components Of a Radio over Fiber (RoF) Link :

Radio over fiber (RoF) is an optical fiber link to distribute modulated RF signal from a central location to remote antenna units . the RoF systems are introduced to replace a central antenna with a low power distributed antenna system (DAS) . RoF system is consisting of many base stations , which are connected to a signal central station .RoF system centralize the RF signal processing function in one shared location and use optical fiber link to distribute the RF signal to the RAUs or BSs[2]. RoF based wireless access network architecture is proposed , as a promising alternative to broadband wireless access network . in network architecture . the CS performs all switching . routing and network operations maintenance . optical fiber network interconnects a number of simple and compact antenna BSs for wireless distribution

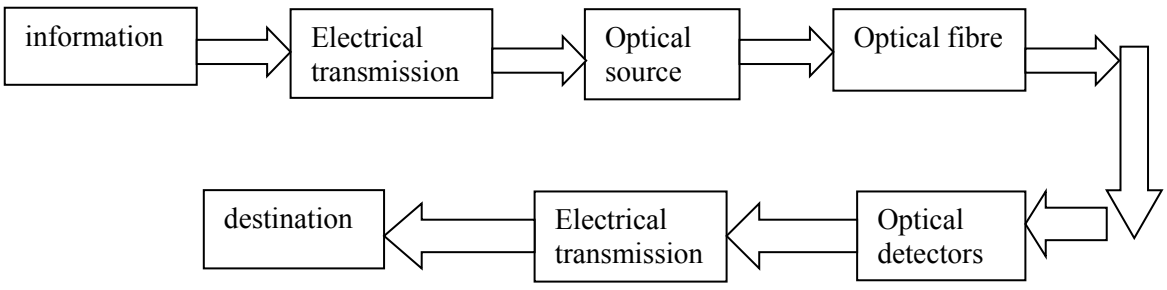

Figure 1:*RoF System Architecture [1].*

I.2.1 CONCEPT OF ROF :

Radio-over-Fiber technology uses optical fiber links to distribute modulated RF signals from BS to Remote Antenna Unit (RAU). In narrowband communication systems, RF signal processing functions such as frequency up-conversion, carrier modulation, and multiplexing are performed at the BS and then fed into the antenna. RoF makes it possible to centralize the RF signal processing functions in one shared location (headend), and then use optical fiber, which offers low signal loss (0.3 dB/km for 1550 nm, and 0.5 dB/km for 1310 nm wavelengths) to distribute the RF signals to the RAUs, as shown in Figure

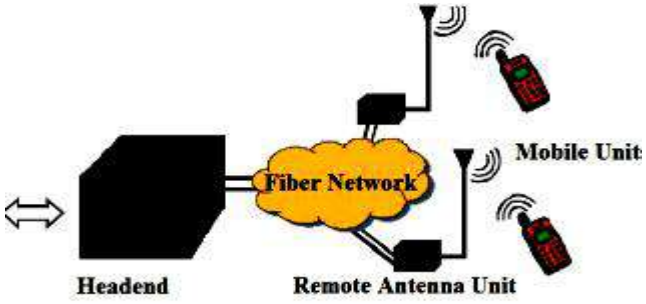

Figure 2:*The Radio over Fiber System Concept*

By doing so, RAUs are simplified significantly, as they only need to perform optoelectronic conversion and amplification functions. The centralization of RF signal processing functions enables equipment sharing, dynamic allocation of resources, and simplified system operation and maintenance. These benefits can translate into major system installation and operational savings, especially in wide-coverage broadband wireless communication systems, where a high density of BS/RAPs is necessary as discussed above.

I.2.2 ARCHITECTURE OF RoF :

RoF transmission system are usually classified into two main categories depending on the frequency range of the radio signal to be transported

1. RF-over-Fiber (Radio Frequency over Fiber)

2. IF-over-Fiber (Intermediate Frequency over Fiber)

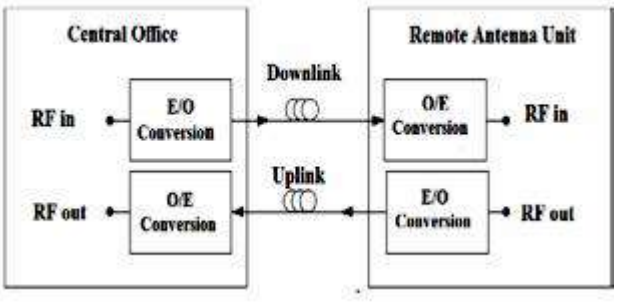

Figure 3:*The Radio over Fiber System Architecture [2].*

1) In RF-over-fiber architecture, a data-carrying RF (radio frequency) signal with a high frequency (greater than 10 GHz) is imposed on a light wave signal before transmission over the optical link. Therefore, wireless signals are optically distributed to base stations directly at high frequencies and converted from the optical to electrical domain at the base stations before being amplified and radiated by an antenna. As a result, no frequency up–down conversion is required at the various base stations, thereby resulting in simple and rather cost-effective implementation is enabled at the base stations [2]

2) In IF-over-fiber architecture, an IF (intermediate frequency) radio signal with a lower frequency (less than 10GHz) is used for modulating light before being transported over the optical link. Therefore, before radiation through the air, the signal must be up converted to RF at the base station .

I.3 Application of radio on fiber

- **Cellular network** : mobile traffic is relayed between base station and central station Via ROF system [3].
- **Wireless LANs :** can be used to distributed wireless LAN signals operating at 2.4 GHz to 5 GHz [3].
- **Video distribution system** : it can be used for MAN , wired and wireless network

  Vehicle communication and control :ROF can be used for intelligent transport system , road – to- Vehicle [4].

I.4 Advantages of Radio over fiber system

- High bandwidth
- Low attenuation
- Immunity to radio frequency interference
- Low power consumption
- Multi service capable
- Easy to install
- Free from electrical risk
- Light in weight

I.5 Disadvantages of a Radio Over fiber system

- Signal distortion (Non linearity)
- High cost of optical components
- Dispersion and Noise
- Limited dynamic range

I.6 Introduction of different components used in RoF system

I.6.1 Wavelength division multiplexing :

WDM [5] is used to multiplex the different optical signals on a single optical fiber by using different wavelengths of laser diode. . This allows for a multiplication in capacity of an optical fiber by adding new channels, each channel on a new wavelength of light, in addition to enabling bidirectional communications over one strand of fiber. This is a form of frequency division multiplexing (FDM) but commonly it is called wavelength division multiplexing.

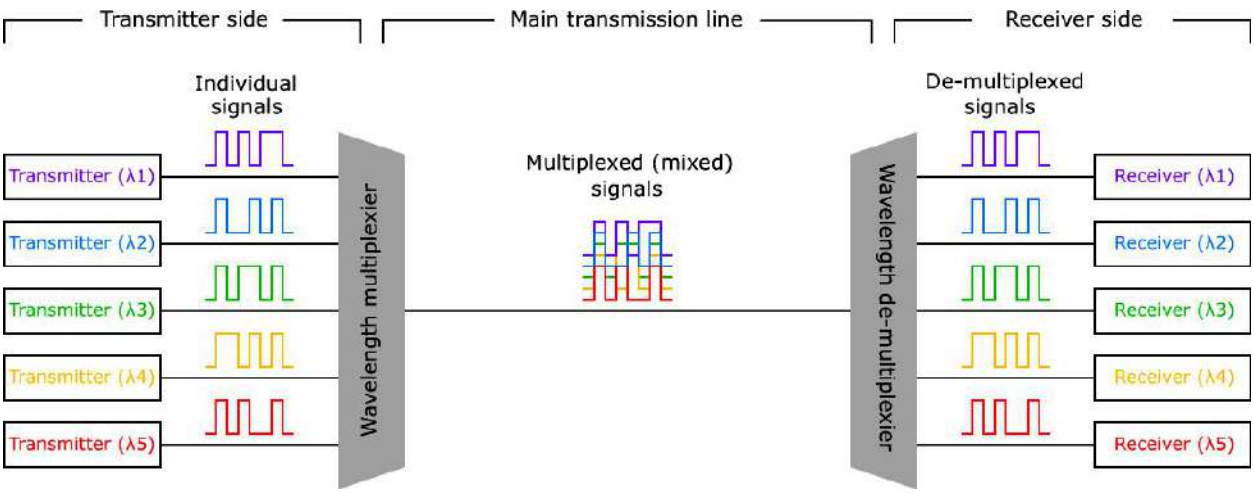

Figure 4:*Wavelength division multiplexing*

I.6.2 Optical add-drop multiplexer :OADM [6] is a technique that is used in WDM for multiplexing and routing different optical signals to or from the optical network. It consist of optical multiplexer or optical DE multiplexer, a path between optical mux and optical demur, a set of ports for adding and dropping optical signals ,a specific wavelength is added or dropped by circulator and FBG (fiber brag grating)s

I.6.3 Erbium doped fiber amplifier:EDFA [7] is a optical amplifier used in optical communication. When optical signals are transmitted over a hundreds of kilometer then it require amplification .In optical communication there may be in-line, pre and post amplification. EDFAs are used for long distance communication with fiber loss less than 0.2db/km. For wavelength near to 1550 nm.

I.6.4Laser diode :A laser diode is a device whose active medium is a semiconductor similar to that found in a LED. The most common type of laser diode is formed from a N type and P type material as p-n junction which is powered by injected electric current .A laser diode is formed by doping a very thin layer on the surface of a crystal wafer. Laser diodes form a subset of the larger classification of semiconductor p-n junction diodes. Due to forward biasing two type of charges are introduced in device. Holes are injected from the p-doped, and electrons from the n-doped, semiconductor.

I.7 Optical transmitting unit (radio to optical conversion)

The Optical transmitting unit represents a fundament building block in radio – over fiber (RoF) architectures where its primary objective is to execute the radio – frequency to optical (RF –to optical) conversion . this process is typically achieved by modulating the high – frequency RF signal onto an optical carrier generated by a semiconductor laser diode despite the high efficiency of modern optical transmitters the overall transmission performance is fundamentally constrained by inherent physical impairments encountered along the optical fiber link .

I.7.1 Fiber Chromatic Dispersion and the Fading Phenomenon :

During the propagation of the modulated optical signal through the optical fiber medium the signal is highly susceptible to fiber chromatic dispersion (CD) . this deterministic physical phenomenon arises due to the frequency – dependent phase velocity of light within the silica core meaning that different spectral components of the light wave travel at varying velocities

In a conventional double –sideband (DSB) modulation schema the modulation process generates two symmetrical sidebands around the central optical carrier separated by a spacing equivalent to the RF driving frequency as this composite signal travels through the dispersive fiber link the chromatic dispersion introduces asymmetrical phase delays between two sidebands .Upon reaching the receiver these phase –shifted sidebands undergo a square –law detection process at the photo –detector (PD) . the superposition of these out – of – phase components results in destructive interference commonly referred to as the fading effect this impairment causes a periodic power degradation of the recovered RF signal a challenge that becomes exceptionally severe when operating at higher frequency spectra such as the millimeter –wave (mm-wave) bands .

I.7.2 Advanced Dispersion Mitigation schemes in transmitter Design :

to overcome the limitations imposed by chromatic dispersion and to maintain signal integrity over extended transmission distances advanced optical modulation formats are integrated directly into the design of the optical transmitting unit . the two most prominent architectures include :

- **Optical single sideband (OSSB) Modulation :** in this configuration the optical transmitter is engineered to suppress or eliminate one of the redundant RF sidebands

thereby transmitting only a signal sideband alongside the optical carrier by breaking the symmetry of the double – sideband structure the phase –detector is effectively neutralized consequently the OSSB approach significantly mitigates the dispersion-induced power fading enabling long-haul transmission without catastrophic power penalties .

- **Optical carrier suppression (OCS) Modulation :** the OCS technique involves biasing the optical modulator at its minimum transmission point to suppress the central optical carrier component after the modulation process this yields an optical spectrum consisting exclusively of two first-order sidebands separated by twice the target RF frequency . upon arriving at the receiver the beating of these two sidebands at the photo-detector surface seamlessly reconstructs the desired RF signal due to its inherent architectural properties the OCS scheme exhibits high tolerance to chromatic dispersion making it a highly robust and spectrally efficient solution for next-generation high-frequency ROF networks .

I.8 light sources for RoF (laser diodes: DFB ,VCSEL)

In radio over fiber (ROF) networks the selection of an appropriate optical light source is critical as it directly governs the system transmission distance modulation bandwidth cost and overall signal integrity semiconducting laser diodes are the standard choice for RoF due to their high output power fast response time and narrow line widths . Among the various laser architectures Distributed feedback (FFB) lasers and vertical-cavity surface – emitting lasers (VCSEL) are the tow dominant light sources utilized in modern configuration :

- **Distributed-feedback (DFB) lasers :** are monolithic devices that have an internal structure based on In GaAsP waveguide technology and an internal grating (typically at the interface of the n-In P substrate and n-In GaAsP layers) to provide feedback at affixed wavelength, determined by the grating pitch. DFBs are an extension of the electro absorption-modulated lasers and take their name from their structure. The DFB structure may be combined with multiple quantum well (MQW) structures to improve the line width of the produced laser light (as narrow as few hundred kilohertz).MQWs have a structure similar to diode structure, but the active junction is only a few atomic layers thick. The resonant cavity may be of the Mach-Zehnder or the Fairy-Perot type.

DFB lasers are reliable sources with center frequencies in the region around1310 nm, and also in the 1520-1565 nm range; the latter makes them compatible with erbium-doped fiber amplifiers and excellent sources in dense wavelength division multiplexing (DWDM) applications.

A complete DFB laser device contains other components necessary to stabilize the center

frequency and maintain a constant uniform amplitude. For example, a photodiode monitors the laser output; a thermoelectric cooler (TEC) or heat pump and a heat sink control the junction temperature of the laser chip; and feedback circuitry controls its output to constant level and frequency. A complete DFB laser packaged device may contain more components aimed at stabilizing the center frequency and maintaining constant amplitude. For example, a device may include a 5% power reflector in conjunction with a photodiode ([a positive intrinsic negative photodiode (PIN) or an avalanche photo detector (APD)] to monitor the laser output and a feedback circuit to control the output power. Another device may include a thermoelectric cooler and heater (TEC) and a heat sink to control the temperature constant to 25°C over the package

temperature range, -20 to 65°C. However, the internal package structure and components are not standard; there is variation from manufacturer to manufacturer.

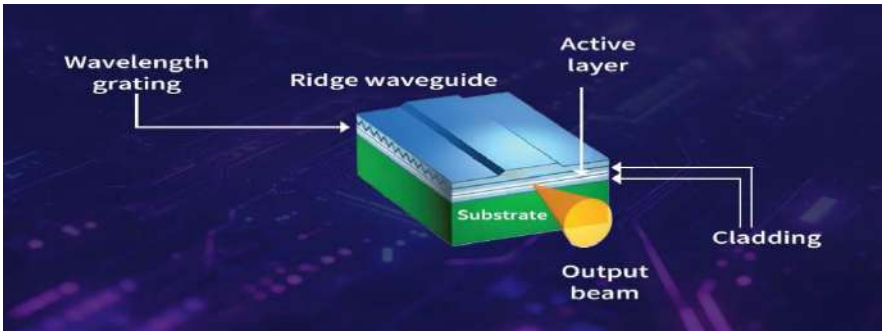

Figure 5: *Components of a DFB Laser*

➢ VCSEL lASERS

Fabry-Perot devices, DFBs, and DBRs typically require substantial amounts of current to operate, in the order of tens of mill amperes. Moreover, their output beam has an elliptical cross section, typically an aspect ratio of 3:1, which does not match the cylindrical cross section of the fiber core . Thus, a no cylindrical beam may require additional optics . A structure that produces a cylindrical beam is known as vertical cavity, surface-emitting laser (VCSEL). This laser consists of a vertical sandwich of a p-type multilayer, an active region, and an n-type multilayer (Figure). The p-type and n-type multilayer's (40-60 quarter-wavelength layers) comprise Bragg reflectors (DBR)

that are made with In + Ga + As + (AI or P), depending on the wavelength

desired. For example, In + Ga + As + P is used for lasers in the wavelength window from 1300 nm to 1550 nm. These layers are made with epitaxial growth followed by planar processing. Clearly, the foregoing description is very general; the exact process and consistency of the multilayer's and the overall device is manufacturer dependent (and proprietary) .

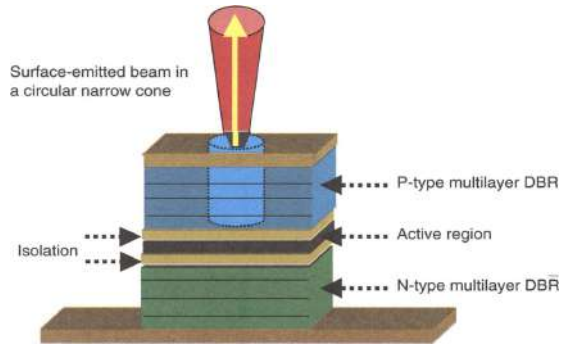

Figure 6:*simplified VCSEL structure.*

The VCSEL structure is very compact and can easily incorporate MQWs, since the latter are made from the same elements and with a similar (multilayer) structure, thus increasing the efficiency of the laser device. VCSEL devices may be made to form a matrix of lasers, each at different wavelength. Such a device, combined with other optical components and

detectors in a matrix configuration, opens the possibility of some interesting devices, such as space optical switches.

- **Performance comparison between DFB and VCSEL lasers :**

Table 1:*DFB vs VCSEL*

Feature / Laser Type	DFB Laser	VCSEL
Emission Direction	Edge	Vertical
Spectral Line width	Very narrow	Moderate
Wavelength Stability	Excellent	Good
Modulation Speed	High	High
Mode Control	Single-mode	Multi-mode
Fiber Type	SMF	MMF
Typical Wavelengths	1270–1610 nm	~850 nm

I.9 Modulation Techniques in radio over fiber (RoF)

In the design of radio over fiber (RoF) link , the conversion of electrical RF signals into optical signals is a critical step . this process is achieved through two primary modulation techniques :

I.9.1 Direct Modulation :

Direct Modulation technique which is also known as intensity modulation (IM) directly modulates the amplitude of the laser beam according to input RF Signal. In External modulation method, devices such as MZM can be used to modulate the phase of the optical carrier. External modulation is preferred due to the fact that direct modulation is ideal for inexpensive transmitters, but it causes an undesirable wavelength chirp, which causes excessive chromatic dispersion at high speeds.

I.9.2 External Modulation :

For higher frequency range which is used in worldwide interoperability for microwave access (WiMAX) and MMW. Intensity-modulation (IM) is preferred mainly due to the simplicity and is based on a photo detector. For example a photodiode is operates as a simple amplitude threshold detector. Therefore, external modulation is needed for higher speeds or when the light

cannot be directly modulated [8] . A Mach-Zehnder Modulator is used for controlling the amplitude of an optical wave. The input waveguide is split into two waveguide interferometer. A phase is induced for the wave passing through arms, if voltage is applied across one of the arms When two arms are recombined, the phase difference between two waves is converted to an amplitude modulation. Mach-Zehnder modulator (MZM) is the most preferred modulator generally termed as an electrical to optical (EO converter). Recent researches in the field of MZM reveal that, MZM can be used more than just an EO converter like to achieve linearization or for the compensation of dispersion introduced in the signal while travelling through an optical path. Specially designed MZM can resolve both the issues simultaneously [9,10].

- **Mach-Zehnder Modulator (MZM):** In optical transmission systems, communications traffic is conveyed by optical carriers. The intensity of carriers is modulated by the communications traffic. The optical carriers can be Amplitude Modulated (AM) or Phase Modulated. Modulation technique is the most significant processes in RoF system where the RF electrical signal is applied to modulate the optical carrier. RoF modulation methods can be categorized into two main groups that are either integrated with Mach-Zehnder interferometers or Electro Absorption Modulator (EAM).
- **Working Principle of MZM :**The Lithium Notate (LiNbO3) Mach- Zehnder Modulator is the most popular modulator in optical communication systems. Mach-Zehnder modulator can be categorized as single drive Mach- Zehnder Modulator and dual-drive Mach- Zehnder Modulator. The optical wave enters from the input side and then splits equally into its two arms. The structure of the dual-drive MZM has two arms and electrodes. Mach- Zehnder modulator is used to control the amplitude of an optical wave. Input waveguide splits into two waveguide interferometer arms and bias is applied to these arms, A phase shift is induced in the wave passing through the arm, due to the applied voltage. The optical signal travelling through both arms of the interferometer are recombined at the output of MZM and the phase difference between the two waves is converted to an amplitude modulated signal.

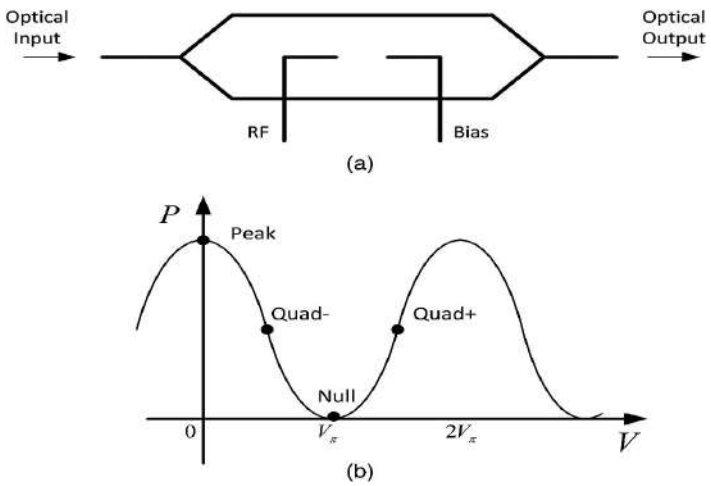

Figure 7:*Layout of Mach Zehnder modulator*

The RF signals are applied to the two arms of the interferometer with different phase shifts. Both arms are biased with different DC voltages. By changing the applied voltage on the electrode, the optical phase in each arm can be controlled [10,11] . Advantages of MZM- Flexibility in fringe location can be provided by the Mach-Zehnder Modulator, but it is not possible with other interferometers. In Mach-Zehnder interferometers rectangular arrangement is commonly used.

I.10 The characteristics of optical fiber in Radio over fiber (RoF):

Within the framework of radio over fiber (ROF) topologies the optical fiber medium does not merely serve as a passive waveguide rather its intrinsic electromagnetic and structural properties dictate the ultimate performance boundaries of the analog transport link the paradigm shift from conventional copper – based coaxial distribution networks to fiber optic fro thematically and physically superior characteristics inherent to silica –based fibers these defining parameters include :

- **Ultra –low Attenuation coefficients :**

The primary limiting factor in analog RF distribution is signal power dissipation . optical fiber exhibit extraordinarily low attenuation curves when compared to the highly lossy coaxial alternatives . within the low –loss telecommunication windows-specifically the C-band centered around = 1550 nm the attenuation coefficient of standard signal – mode fiber (SMF-28) approaches the theoretical Rayleigh scattering limit of approximately 0.2dB/km this characteristic drastically enhances the power budget of the link enabling the unamplified

transport of high- frequency anagogic carriers over multi-kilometer spans while preserving an acceptable carrier – to- noise ratio at the remote nod .

- **Extremely wide Bandwidth capabilities :**

Optical fiber offer an information _carrying capacity that spans several terahertz within the low –loss windows the massive bandwidth allows the fiber to act as a transparent transport medium for multiple high frequency RF carriers simultaneously (such as 5G\ 6Gmm wave signals) unlike coaxial cables whose attenuation increases exponentially with frequency the transmission characteristics of optical fiber remain virtually flat across an ultra-wade RF spectrum , eliminating the need for frequency down – conversion at the transmitter side ,

- **Immunity to Electromagnetic interference (EMI) :**

Since silica –based optical fibers are dielectric materials they are entirely immune to electromagnetic interference (RFI) this intrinsic property ensures that the analog RF signal modulated onto the optical carrier is completely isolated from external environmental noise crosstalk from adjacent cables or lightning strikes consequently radio over fiber (ROF) topologies achieve an exceptionally high signal to noise ratio (SNR) and secure data transmission in harsh industrial or military environments

- **Chromatic Dispersion and power Fading Limitations :**

While attenuation is minimal chromatic dispersion (CD) stands as a critical defining parameter in long –haul analog ROF links as the modulated optical carrier propagates down the single –mode fiber (SMF-28) different spectral components travel at slightly different velocities , in double –sideband (DSB) intensity modulation this phase shift leads to a destructive interference destructive phenomenon known as RF power fading at the photo-detector managing this dispersion through dispersion compensating fibers (DCFs) or single –sideband (SSB) modulation is imperative to preserve link performance over extended distances

I.11 Conclusion :

In conclusion , this chapter has established the foundational concepts , architecture and operational principles of Radio over fiber (RoF) technology positioning it as a pivotal paradigm

for next generation wireless communication networks such as 5G and beyond By decoupling the complex signal processing unit from the remote antenna sites , RoF technology offers a centralized infrastructure that significantly simplifies Remote Antenna Units (RAUs) , thereby reducing both capital expenditure (CAPEX) and operational expenditure (OPEX) in modern network deployment ,

Through a comprehensive review of the RoF link components the unique merits of this technology _ most notably its immense bandwidth potential low attenuation and immunity to electromagnetic interference _ were highlighted conversely the chapter also critically examined the key physical impairments that degrade system performance during optical propagation prominent among these challenges is chromatic dispersion which induces the power fading phenomenon alongside non- linear distortion and phase noise introduced by optoelectronic .

To mitigate these limitations advanced optical modulation techniques and dispersion –tolerant schemes were explored including external modulation utilizing (MZM)to eliminate frequency chirp . as well as optical carrier suppression (OCS) and optical single sideband (OSSB) techniques designed to counteract dispersion – induced power fading .

Ultimately profound comprehension of these fundamental mechanisms and link impairments provides the essential theoretical framework required for the subsequent chapters . this foundational knowledge directly paves the way for chapter two which will delve into a detailed physical analysis of the transmission medium it self_ **optical fiber fundamental** _ to rigorously analyzed light propagation characteristics and fiber _specific impairments before proceeding to the numerical simulation of the designed ROF link .

Chapter II:

Fundamentals of Optical Fiber

II.1 Introduction

In the past, the fastest digital systems transmitted information at a rate of 10 Mbits/s. The coaxial cable was perfectly suited to perform its function as a transmission medium. However, with the emergence of new services related to the development of multimedia, there was a need for a very high transmission rate. An alternative to the coaxial cable appeared due to its very high losses, short propagation distances, and limited performance.

Optical fiber is currently the transmission medium par excellence—ideal, the most reliable, and the most secure—for data transmission in the world of telecommunications.

II.2 History

Graham Bell had envisioned as early as 1880 a system for transmitting sound using light rays. To realize such an idea, a coherent light source and a suitable transmission medium had to be developed. More than a century was needed, with the first laser operating at room temperature being built by Bell Labs in 1970. In the same year, the invention of the Light Emitting Diode (LED) by C. A. Burros provided another solution for producing a light source usable in telecommunications.

At the same time, the American glass giant Corning Glass Works saw its efforts rewarded by producing an optical fiber composed of a doped silica core and extremely pure silica. The attenuation limited to 20 dB/km opened the way for optical transmissions. By the end of the 1970s, it even reached 0.2 dB/km. AT&T in 1977 and CNET in 1980 used this new technology for commercial traffic. The evolution accelerated with a new generation of fibers called “single-mode,” first implemented in France on the Lannion–Perros link in 1983. As early as 1985, the replacement of old coaxial cables with optical fiber cables for the French interurban network was decided [12].

II.3 Definition

Optical fiber is a very thin thread made of glass or plastic that conducts light to transport a large amount of digital data at very high speed over long distances. The network is deployed by service providers who use this infrastructure.

The ability of optical fiber to transmit information very quickly enables the development of new applications in several fields such as television and medicine. Recently, optical fiber has also been used in lighting and fibro copy.

It offers a significantly higher data rate compared to traditional coaxial cables.

Therefore, optical fiber is used to:

- Transport digital information.
- Use variations in light intensity to generate a binary signal.

II.4 Description of Optical Fiber

An optical fiber cable is supported with reinforcing fibers made of plastic, such as Kevlar. This makes the cable more resistant, ensuring that the optical fibers are not damaged when they are bent.

When we talk about optical fiber, it is because this cable carries light. This light is guided in the center of the fiber, which is called the core.

II.4.1 The Core

This component is mainly made of silicon, enriched with other elements. It is in this core that most of the guided light energy is confined. It is surrounded by the optical cladding.

II.4.2 The Optical Cladding

The optical cladding is generally made of the same material as the core, but doped differently. Its refractive index is lower than that of the core, which allows the light to be reflected.

It is protected by a coating, often made of plastic.

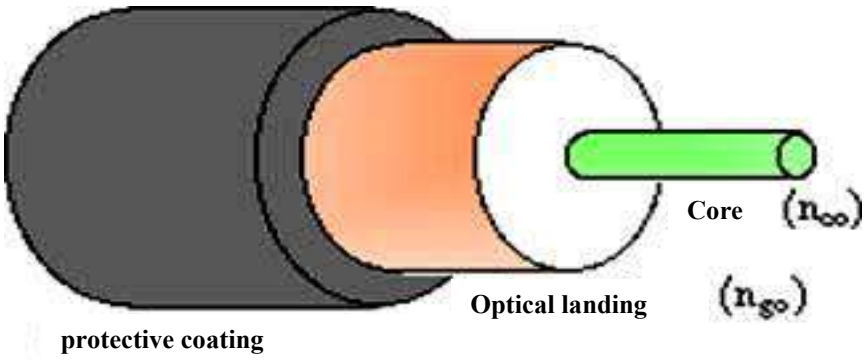

Figure 8:*Description of the Optical Fiber*

II.5 Light Guiding Condition

The propagation of a ray in the fiber requires that it be reflected at the core/cladding interface of the fiber. This requires control of the angle of incidence of the ray at the input face of the fiber.

For an angle of incidence lower than the critical angle, the ray is guided within the fiber. However, if it is greater than the critical angle, the ray will not be guided in the fiber.

II.6 Different Types of Optical Fiber

Depending on the wavelength used and the diameter of the core, two types of optical fibers are distinguished:

- Single-mode optical fiber
- Multimode optical fiber

II.6 .1 Single-Mode Fiber

An optical fiber that transmits only one ray is called a single-mode fiber. It is mainly used by operators for long distances (WAN).

Data transmission is carried out using a laser, and the use of this type is very expensive.

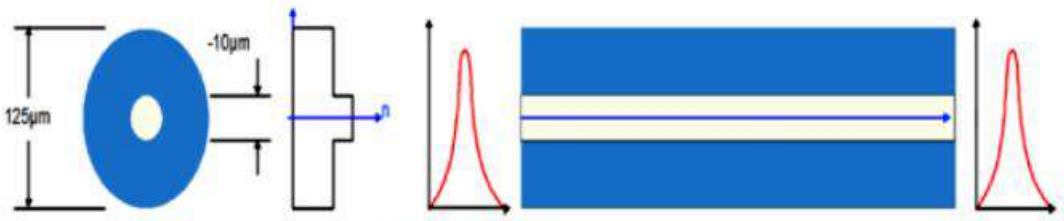

Figure 9 :*Single-Mode Fibre*

Single-mode fibers have a very thin core, about the size of a hair. The attenuation in this type of fiber is almost zero, which makes it very powerful.

II.6 .2 Multimode Fiber

An optical fiber that transmits multiple rays, with different paths, is called a multimode fiber. The core of a multimode fiber is larger than that of a single-mode fiber.

It is mainly used in local area networks (LAN) where the distance does not exceed two kilometers. Data transmission is generally carried out using an LED.

Multimode fiber is less expensive, which makes it the preferred and most widely used cable by companies.

II.6 .2.1 Step-Index Multimode Fiber

Step-index multimode fibers are the most common. This type of fiber is used in LAN networks. Light propagates inside the silica core, which is why light rays travel by total internal reflection in a "zigzag" pattern.

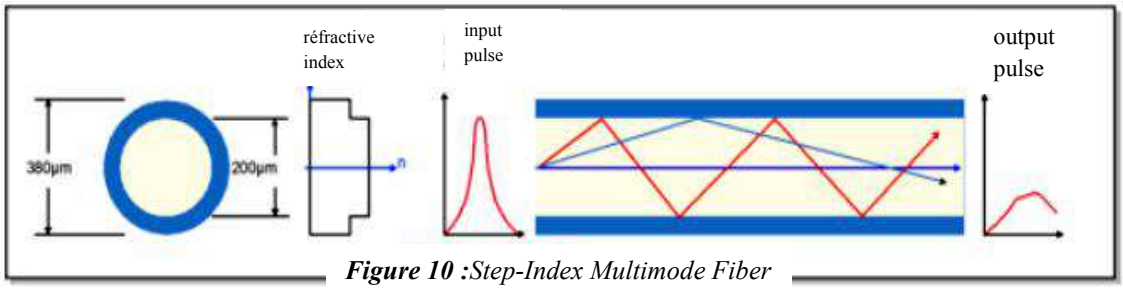

Figure 10 :*Step-Index Multimode Fiber*

The step-index fiber has a very wide core.

The attenuation in this type of fiber is very high, as can be seen from the difference between the input and output pulses.

II.6 .2.2 Graded-Index Multimode Fiber

Graded-index multimode fiber is also used in local area networks. It is a multimode fiber, so multiple propagation modes coexist.

Unlike step-index fiber, there is no large difference in the refractive index between the core and the cladding. However, the core of graded-index fibers is made of several layers of material with progressively higher refractive indices.

These different layers of silica with varying densities influence the direction of light rays, which take an elliptical shape.

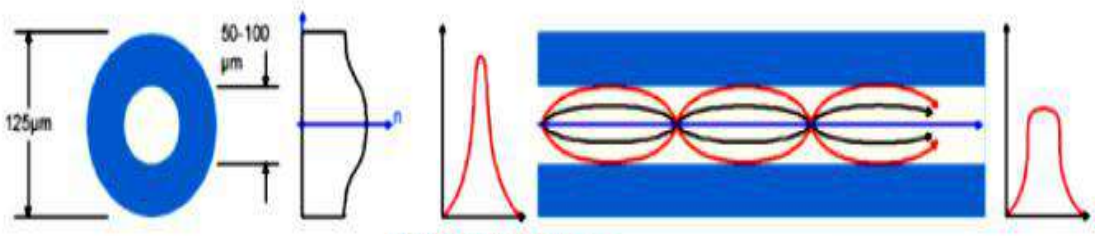

Figure 11 :*Graded-Index Multimode Fiber*

The graded-index fiber has a core of intermediate size.

The attenuation in this type of fiber is less significant than in step-index fibers.

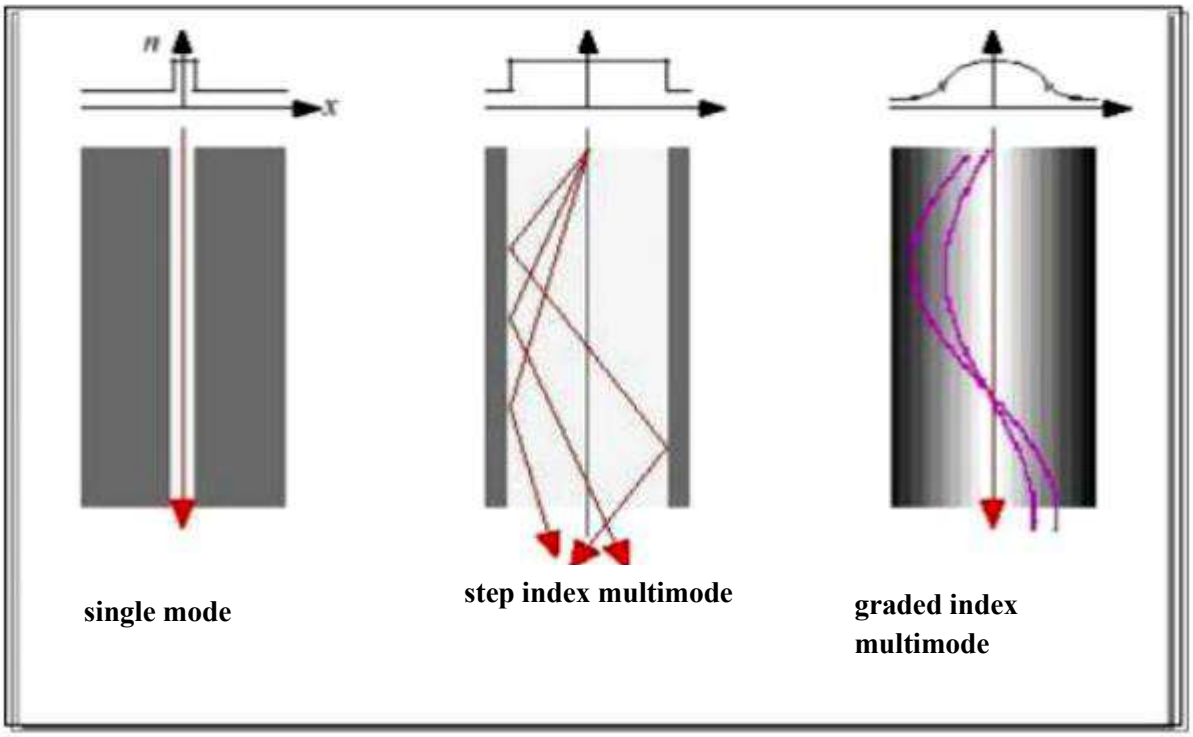

Figure 12:*Attenuation in Step-Index Fibers*

II.6 .3 Performance of the Three Types of Optical Fibers

The following figure shows a comparison of the three types of optical fibers. It can be observed that attenuation remains constant regardless of frequency, but it is the light dispersion that limits the bandwidth.

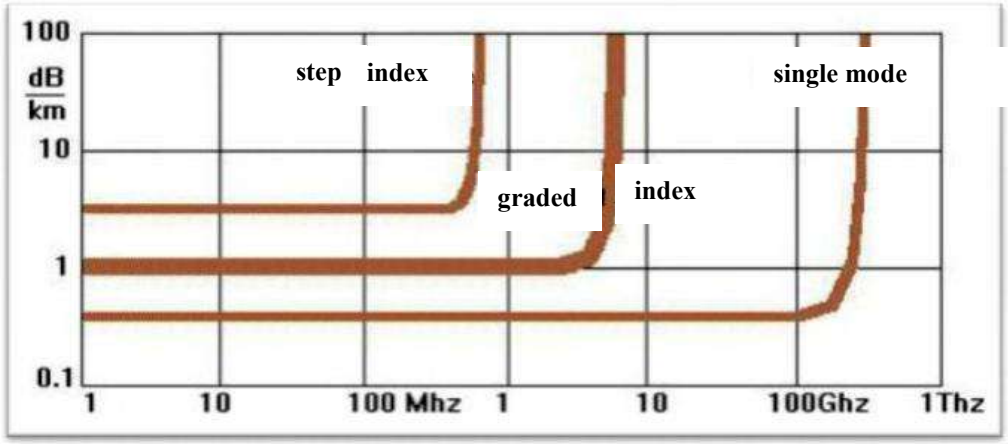

Figure 13:*Performance of the Three Fiber Types [13]*

The table below summarizes a comparison between single-mode fiber and multimode fiber.

Table 2:*Comparison Between Multimode and Single-Mode Fiber [13]*

Single-Mode Fiber	Multimode Fiber
Low dispersion	High dispersion
Delicate connection	Easy connection
Low attenuation	High attenuation
Long distance	Local networks (short distance)

II.7 Principle of Optical Propagation and Transmission

The speed of light varies significantly depending on the different densities of the materials it passes through.

Light rays propagating along the fiber core strike its surface at an angle of incidence greater than the critical angle: all the light is then reflected within the fiber. Light can thus travel long distances, reflecting thousands of times. To avoid light losses caused by absorption from impurities on the fiber surface, the core is coated with a cladding made of glass with a much lower refractive index. Reflections then occur at the core-cladding interface.

II.8 Optical Fiber Communication System

Today, Internet routers and network interface and interconnection systems use optical fiber transceivers in their system designs.

II.8.1 Optical Link

A point-to-point optical fiber link implements several basic subcomponents, as shown in the following figure.

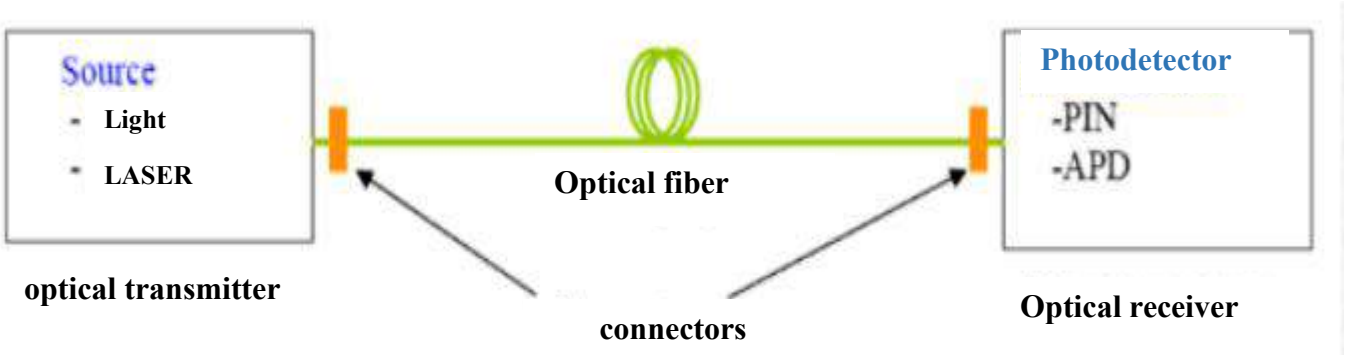

Figure 14:*Diagram of an Optical Link*

II.8.2 Optical Transmitters and Receivers

II.8.2.1 Optical Transmitters

A transmitter has two primary functions: generating an optical signal and modulating this signal with information. An additional useful feature of an optical transmitter is its frequency tenability.

The two classical light sources used in optical fiber are LEDs and LASERs.

II.8.2.2 Optical Receivers

The function of a receiver in an optical transmission system is to detect and demodulate a light signal transmitted over a fiber.

Detection involves converting the optical signal into an electrical signal. Demodulation is generally then performed using standard electrical transmission system techniques.

There are mainly two types of components on the market: photodiodes and PIN photodiodes. Both components convert energy. PIN diodes are the most popular and least expensive.

II.8.3 Multiplexers and Demultiplexers

II.8.3.1 Multiplexer

A multiplexer is a device that combines multiple optical or electrical signals into a single transmission path or optical fiber.

It can simultaneously transfer different types of information over a single channel. These data are combined onto a single channel, a process handled by the multiplexer, which sends the signal to its destination.

II.8.3.2 Demultiplexer

A demultiplexer performs the inverse process of a multiplexer it separates the combined signals back into their original individual channels at the receiving end .

II.8.4 Optical Multiplexing Techniques

II.8.4.1 OFDM Technique

OFDM (Orthogonal Frequency Division Multiplexing) is a digital multi-carrier modulation technique that extends single-carrier modulation to multiple subcarriers on the same channel.

This technique transmits a high-speed bit stream on a single carrier. OFDM uses a large number of orthogonal, closely spaced subcarriers transmitted in parallel.

The spectra overlap, but the signals are orthogonal. Each subcarrier is modulated by a digital modulation type (QPSK, 16QAM, etc.) at a lower symbol rate. Combining multiple subcarriers allows data rates similar to single-carrier modulation with equivalent bandwidth.

OFDM divides each channel into several narrower subcarriers. Each subcarrier has a complete number of cycles of a sine wave whose sum is zero after demodulation.

Advantages of OFDM:

- Spectral efficiency (bandwidth efficiency): more data can be transmitted faster within a given bandwidth in the presence of noise.
- Efficiency is measured in bits/s/Hz.
- Different modulations provide varying maximum data rates for a given BER and noise level.
- OFDM provides better performance.
- OFDM is the best modulation for achieving maximum data capacity for a given bandwidth and approaches Shannon's channel capacity limit in bits/s.

II.8.4.2 OTDM Technique

OTDM (Optical Time Division Multiplexing): Initially, time-division multiplexing was used for electrical systems, which quickly reached its limits at bit rates around 10 Gb/s due to electronic components.

OTDM, developed mainly in the early 1990s, overcame this limitation.

An OTDM transmission chain consists of:

- An optical source generating the pulse train required for the OTDM system.
- A multiplexing system that encodes users' data from the electrical domain to the optical domain before multiplexing.
- A demultiplexing system that recovers each user's data before it is converted back to the electrical domain.

II.8.5 Optical Sources

Since the beginning of optical fiber communications, semiconductor emitters have been chosen due to their small size.

The most suitable source provides better optical coupling efficiency with the fiber.

Additionally, the need for wider bandwidths requires sources with narrow spectra such as laser diodes (LD) and light-emitting diodes (LED).

II.8.5.1 Laser Diode (LD)

A laser diode (LD) is a semiconductor junction designed and used to exploit the laser effect.

Characteristics:

- Coherent and monochromatic source
- Narrow spectral width
- Emissions in the same direction (directive radiation pattern)
- Used in long-distance transmission systems

II.8.5.2 Light Emitting Diode (LED)

An LED directly emits photons by recombination of carriers in a forward-biased heterojunction. Materials are chosen according to emission wavelength.

Characteristics:

- Polychromatic and incoherent source
- Relatively broad spectrum
- Less directive radiation pattern
- Power-current characteristic is fairly linear
- Used in transmission systems not requiring large bandwidth

II.8.6 Photodiode

A photodiode is a semiconductor component capable of detecting optical radiation and converting it into an electrical signal.

It consists of a heterogeneous PN-structure crystal placed between two electrodes connected to a voltage source via a load resistor.

The following figure shows the internal composition of a photodiode.

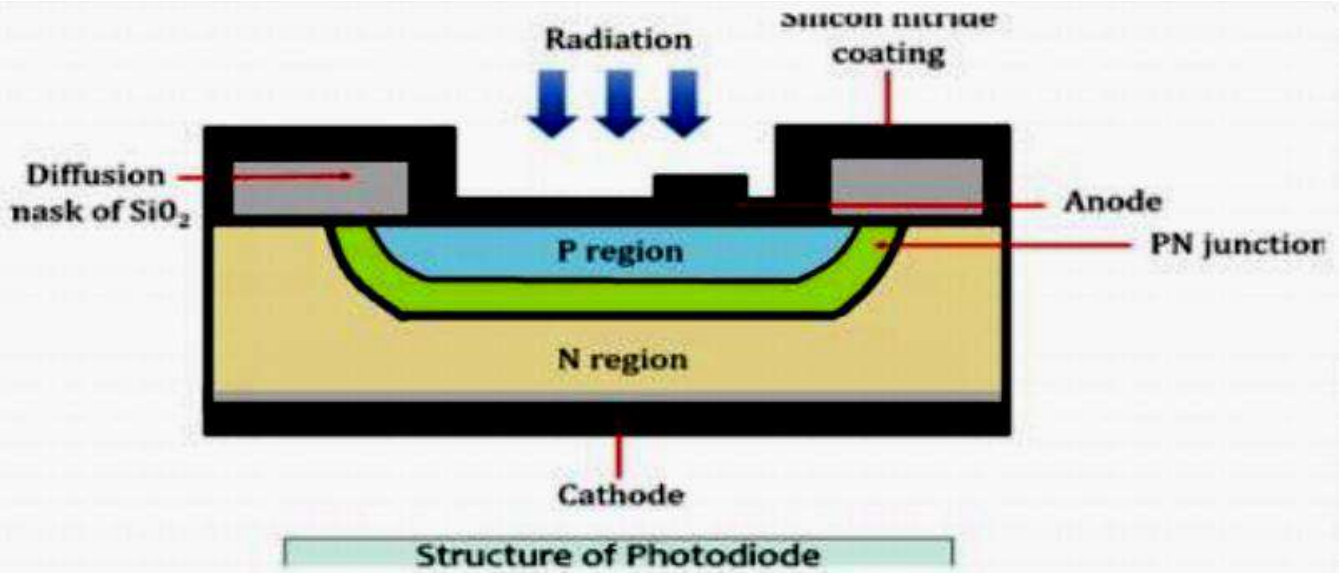

Figure 15 :*Structure of the Photodiode*

II.8.7 PIN Photodiode

The PIN photodiode is an optoelectronic component, used in many industrial applications.

Its particularity comes from its junction composed of an intrinsic region sandwiched between a heavily doped P region and another heavily doped N region.

Similarly, the PIN photodiode has a quantum efficiency (conversion of photons into electrons) much higher than the PN photodiode, while maintaining very fast response times **Erreur ! Signet non défini.**.

II.8. 8 Characteristics of Optical Fiber

Optical fiber is characterized by certain parameters which are determined based on its different types. Among the most important parameters, we can mention:

- Numerical aperture
- Attenuation

II.8. 8.1 Numerical Aperture of an Optical Fiber

The numerical aperture of an optical fiber characterizes the acceptance cone: if the light rays are within this cone, they will be guided by total internal reflection within the fiber; otherwise, the ray will not be guided.

For single-mode fibers, it is preferable to use a laser source, as the numerical aperture is small. But for graded-index fibers, where the index varies along a diameter, the numerical aperture is then maximal along the fiber axis and zero at the core periphery.

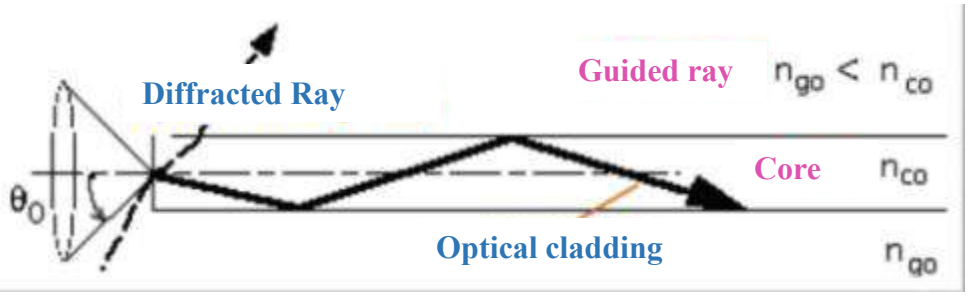

Figure 16:*Numerical Aperture of an Optical Fiber*

II.8. 8.2 Attenuation

Attenuation in an optical fiber is defined as the ratio of the transmitted optical power to the received optical power, expressed by:

$$A = 10 \text{ Log } 10 (Pt \setminus Pr) \text{ .....(1)}$$

with :

- Pt : optical power at the input (transmitted power)
- Pr : optical power at the output (received power)

Attenuation causes energy loss of the transmitted signal. Among the main causes, we mention:

1. Intrinsic properties of the materials used: scattering, absorption…
2. Manufacturing defects: impurities, geometric defects…
3. Non-compliance with engineering rules: excessive bends

Attenuation also causes an exponential decrease in optical power along the fiber.

To summarize all these losses and attenuation present within an optical fiber, here is a schematic overview.

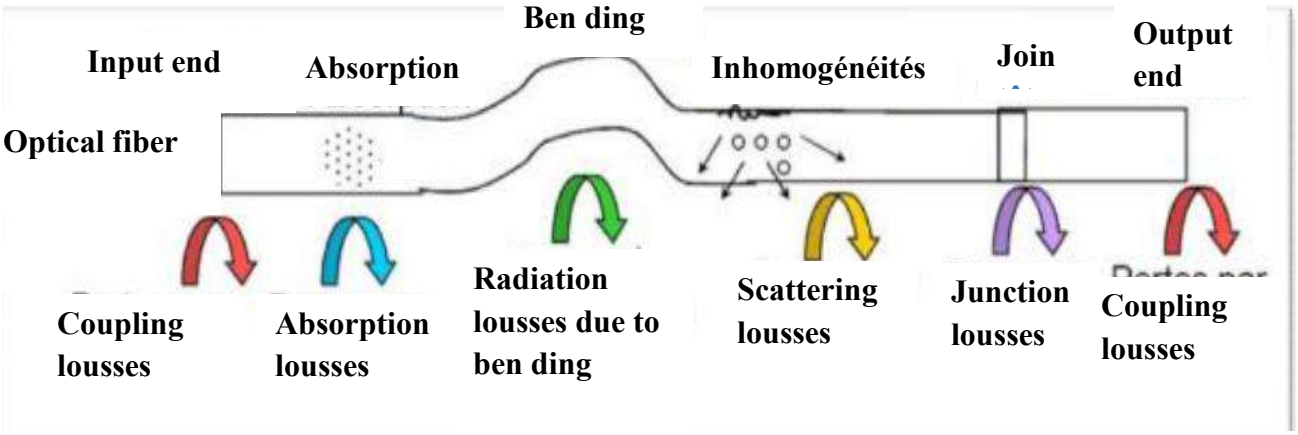

(a)

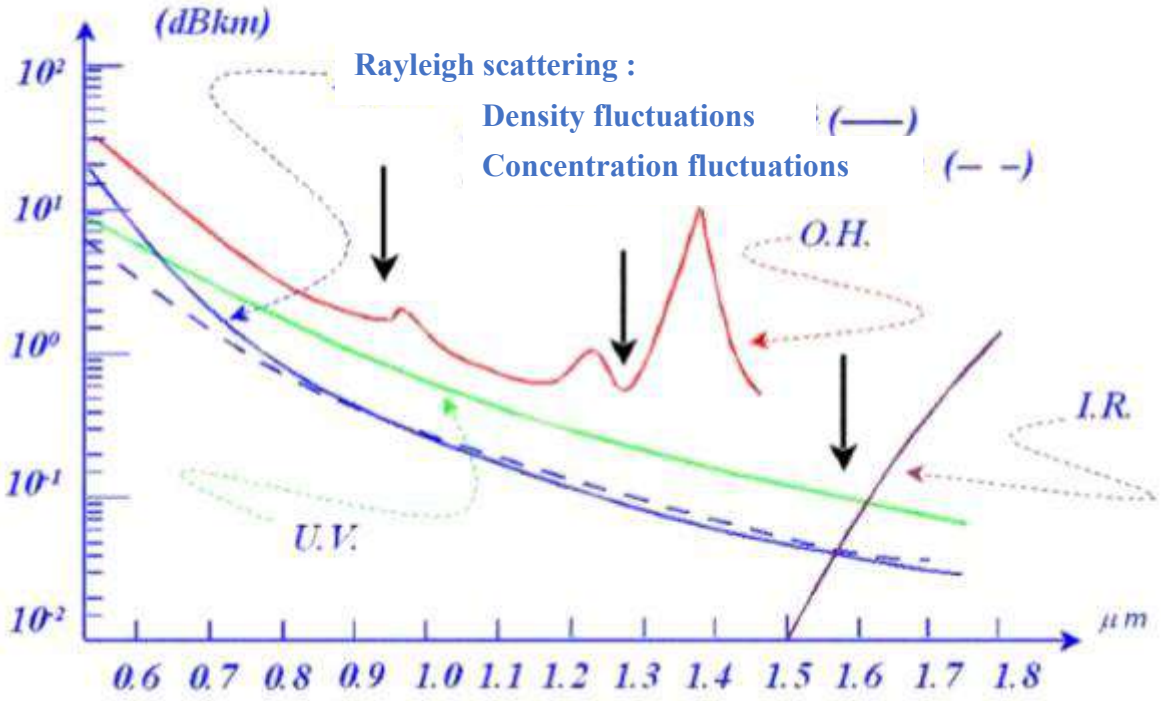

(b)

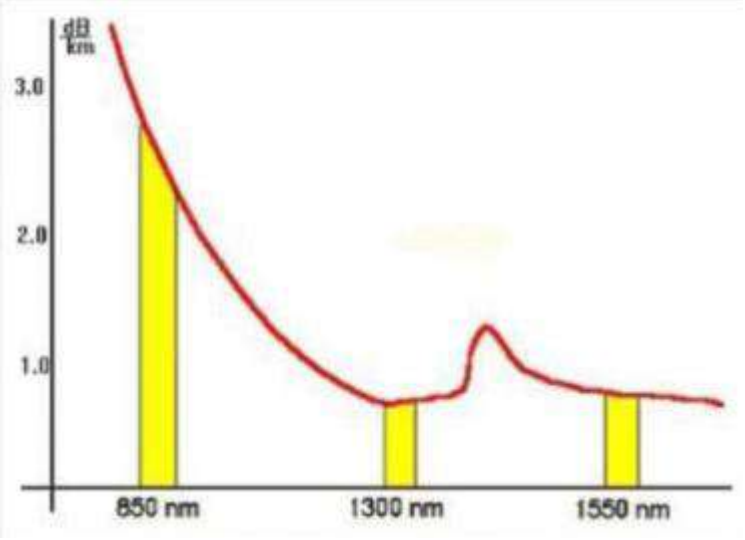

(c)

Figure 17: (a),(b) and (c) *Attenuation in Optical Fibers*

II.8. 8.3 Causes of Signal Attenuation in Fibers

Attenuation in optical fiber manifests as a loss of light energy. Among the main causes of this loss, we can cite:

- **Absorption by impurities:** purified silica fibers are not perfect, so absorption of the photon by an electron in the atom will have several disruptive effects.
- **Rayleigh scattering:** this is the scattering of light by molecules. Silica has

local variations of refractive index due to density changes, as well as scattering by impurities or core-cladding interface defects.

- **Chromatic dispersion:** caused by the change in the speed of light signals of different wavelengths.
- **Geometric defects:** fiber manufacturing processes cause these poor interfaces, and therefore there are always some imperfections, e.g., geometric irregularity (core/cladding) in fiber fabrication.
- **Bending phenomenon:** total reflection of the entire signal in the guide no longer occurs; part of the signal will be transmitted into the cladding, leading to power loss.
- **Sensitivity to bending** is even more significant when working at high wavelengths.

II.9 Application Areas of Optical Fiber

The field of optical fiber usage is unlimited and constantly evolving. Among the current applications of optical fibers, we can cite the following:

Telecommunications

In telecommunications, optical fiber is mainly used for data transmission, whether for telephone conversations or images.

This is probably one of the areas where the use of optical fiber is most significant and offers great advantages.

It is used in networks such as national, international, and local networks in noisy environments.

In Medicine

Optical fiber is used in medicine both to diagnose health problems and to treat certain diseases.

In treatments, it serves to transport intense laser light inside the human body, where it interacts thermally with tissues.

In surgery, combined with a laser beam, it allows to:

- Pulverize a kidney stone
- Cut a tumor
- Repair a retina
- And in endoscopy, it is used to illuminate the interior of the body and transmit

images to the physician.

Sensors (temperature, pressure, …)

Applications of optical fiber in this field are recent. For example, it allows measuring a variation in temperature.

Lighting

In lighting, optical fibers are widely used, for example in architecture and the design of public and domestic spaces.

Today, they are also essential in photography, marking, decoration, and especially in advertising.

Military Field

Optical fiber is very useful in this domain, especially for control and radar systems.



***Figure 18**:Some Examples of Optical Fiber Applications*

II.9.1 Advantages of Optical Fiber

Optical fiber offers many advantages associated with high-speed internet connection:

- Connection speed is higher and faster, with better quality over long distances.
- Simultaneous use is possible and much more comfortable; several people in the same establishment can benefit from a high-speed connection.
- The connection is more stable because fiber optic cabling is not subject to electromagnetic interference or electrical disturbances.
- Transmission rate is greatly improved with excellent transmission quality.

- Optical fiber has a longer lifespan; generally, it has a longer life cycle, which is why Internet service providers invest heavily in fiber deployment.
- Higher load capacity. Optical fibers being much thinner than copper wires can be grouped in a cable of the same diameter, allowing more telephone lines to pass through the same cable.
- Resistance to high temperatures and corrosive products.
- Very low losses.
- Very wide bandwidth.

II.9.2 Disadvantages of Optical Fiber

Despite its advantages, optical fiber has some drawbacks:

- Health effects: when working with optical fibers, the eyes can be damaged due to light transmission.
- Fragility: optical fiber is more fragile compared to copper wires; cables should not be twisted or bent.
- Distance between transmitter and receiver must remain short.
- Difficulty in connecting two fibers.

II.10 Fiber Coupling

Fiber optic coupling is done to connect two fibers together using several methods, such as:

- Mechanical coupling of two connectors using a mechanical piece.
- Mechanical "splicing," used for cable connection or repair.
- Fusion, using a device to splice or fuse two fibers together.

II.11 Optical Networks

Optical networks are optical devices that transport signals in optical form rather than electrical form in conventional networks.

They are classified into two categories: all-optical networks and non-all-optical networks.

II.11 .1 All-Optical Network (Transparent Network)

The term "transparency" can relate to several criteria, generally concerning bit rate, modulation format, or transmission format (SDH, PDH…).

In optical networks, transparency refers to the absence of optoelectronic conversion.

This type of network integrates only optical equipment: light is routed in its original form and will not undergo optical-electrical conversion until it reaches its destination.

Establishing an end-to-end optical connection makes this type of network very expensive.

II.11 .2 Non-All-Optical Network (Opaque Network)

An opaque optical network is a network requiring optoelectronic conversion of the incoming signal at each input port of a network node.

The optical signal is converted into an electrical signal at each node.

In this type of network, the optical layer only serves to transport an optical signal between two network nodes.

This network does not allow establishing an end-to-end optical connection [15].

II.12 Different Networks Covered by Optical Fiber

Telecommunication networks can be subdivided into three parts:

- Core network
- Metropolitan network
- Access network

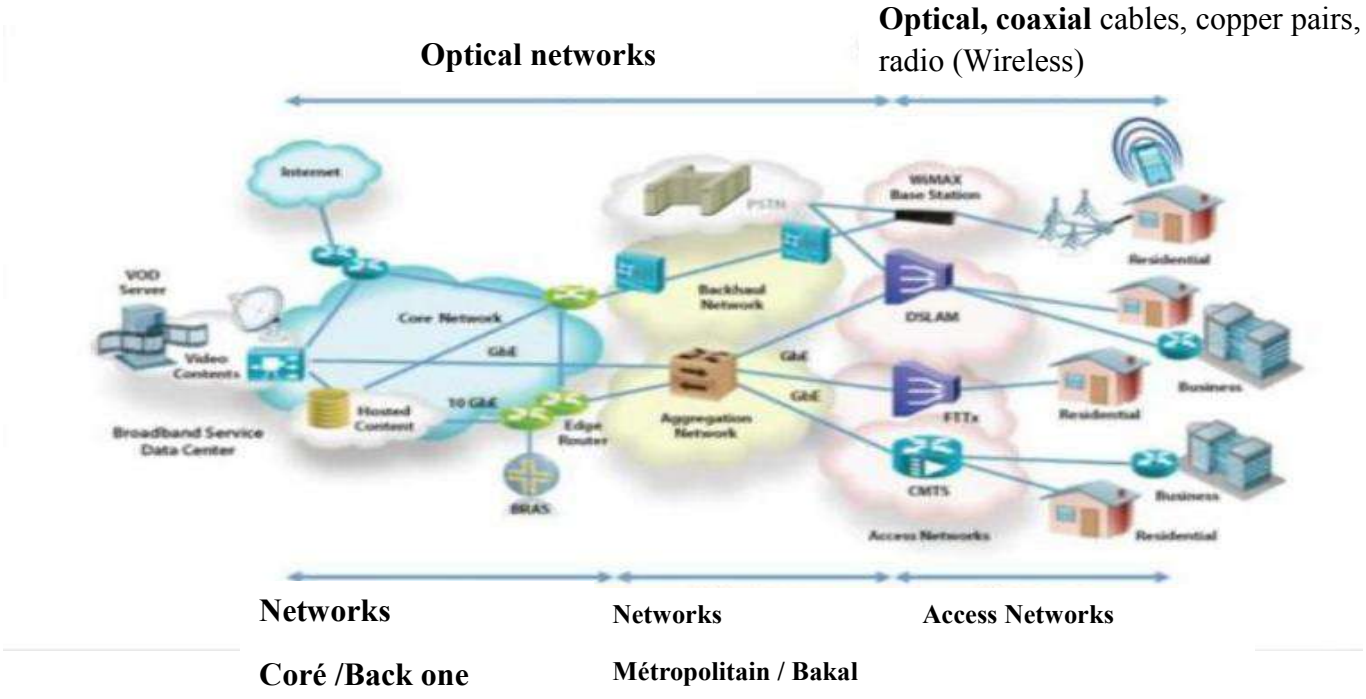

Figure 19:*Different Parts of an Optical Network*

The difference between these networks lies in the size of their coverage areas, the technologies used, and their functions [15].

II.12.1 Access Network

It is a set of means used to connect telecommunication terminals to an infrastructure network switch, using different access technologies such as: WIFI, Ethernet, FTTX.

II.12.2 Metropolitan Network

A metropolitan network is a network composed of computers usually used in cities.

It collects information flow from access networks and transmits it to the core network.

II.12.3 Core Network

The core network interconnects metropolitan networks with each other, the Internet, and other operators' networks.

It uses the latest technologies and supports a large amount of network data.

II.13 Geographic Classification of Networks

Geographically, networks can be classified into three parts:

II.13.1 Wide Area Network (WAN)

A wide area network is a network of devices connected via wired or wireless communication lines.

It is a virtual network that connects different sites over large geographic areas (countries).

II.13.1.1 Terrestrial Networks

Terrestrial networks are networks that:

- Cover a few hundred km and connect major urban centers.
- Are linked by add/drop multiplexers.

II.13.1.2 Submarine Networks

Initially designed to transmit telegraph signals, submarine networks now carry high-speed digital data.They can:

- Reach several thousand km
- Connect islands or countries of the same continent Moreover, laying submarine cables is less costly than burying cables.

II.13.2 Metropolitan Networks

A metropolitan network allows interconnection of users and computing sources within a large area, smaller than that of a wide area network (WAN).

II.13.3 Local Area Networks

A local network allows sharing a single internet connection among all users.
It normally connects computers and other digital devices within an office or a nearby group of buildings.

II.14 Comparison Between the Three Types of Networks

For comparison between the three types of networks, we cite the following table:

Table 3:*Different Types of Optical Networks [15]*

Criterion	**LAN Network**	**MAN Network**	**WAN Network**
Number of elements	**A set of devices belonging to the same organization**	**Interconnects multiple LANs**	**Interconnects multiple LANs or MANs**
Geographic dispersion	**Devices are located within a geographically limited area**	**LANs geographically close**	**Very large distances**
Protocols used	**Ethernet, Token**	**FDDI, ATM, SDH**	**SDH, WDM**

II.15 Conclusion

To conclude this chapter has successfully established the theoretical framework governing optical fiber communications which constitute the cornerstone of contemporary telecommunication infrastructures characterized by expansive bandwidth capabilities and low attenuation coefficients , optical fibers outperform traditional coaxial mediums by enabling high capacity , high speed , and long haul data transmission .

The discussion herein encompassed a detailed architectural review of optical fiber elucidating the core _ cladding boundary and contrasting single _ mode and multi-mode propagation behaviors additionally the core elements comprising the optical link namely semiconductor lasers , multiplexing schemes and PIN photo detectors were systematically reviewed special attention was paid to transmission impairments , specifically attenuation and chromatic dispersion owing to their restrictive impact on signal integrity and system bandwidth .

Chapter III:

Simulation and Results Analysis

III.1 Introduction :

This chapter is dedicated to the practical implementation and simulation of the optical communication system using **Optisystem** software . Optsystem allows for the precise modeling and testing of optical link , enabling us to analyze the behavior of light signals as they propagate through various fiber optic components . the experimental work in this chapters structured into two primary stages of analysis :

- Impact of optical fiber length on transmission quality .
- Impact of laser input power on system performance .
- Adaptive performance improvement of fiber Bragg Grating (FBG) within the radio over fiber (RoF) system

By the end of this chapter the data obtained from the BER Analyzers and Q-Factor visualizers will provide a clear evaluation of the systems efficiency under different operational constraints.

III.2 OptiSystem Software Definition

OptiSystem is a powerful and innovative simulation environment, offering an extensive library of both active and passive components. It includes realistic, wavelength-dependent parameter sweeps and optimizations, and provides comprehensive device and layout descriptions. Long-haul schemes, as well as local and metropolitan area networks, are validated through simulations in OptiSystem [16-20].

III.3 Introduction to OptiSystem Software

OPTISYSTEM features a robust simulation environment with a truly hierarchical definition of components and systems. Its capabilities can be easily expanded by adding new components and interfaces through a widely used toolkit. The simulation process is divided into two steps:

- ✓ Build the block diagram.
- ✓ Analyze the diagram.

Our system represents a **GPON (Gigabit Passive Optical Network)** link composed of an **OLT (Optical Line Terminal)**, an **SRO (Optical Sub-Distributor)**, a **BPI (Building Level Box)**, an **ONT (Optical Network Termination)**, and a splitter.

This link supports high data rates up to 2.5 Gbps with good transmission quality. In this connection, there are two directions:

- **Downlink:** data flows from the OLT to the ONU/ONT.
- **Uplink:** data flows from the ONU/ONT to the OLT [21].

III.4 OptiSystem Description

OptiSystem is a comprehensive application for simulating and testing optical assemblies. It includes a rich library of components such as fibers, customizable measurement devices, and a complete graphical user interface [14].

- **OptiSystem Interface:** The interface consists of a main window divided into several sections [14].
- **Library:** A database of various components, including all types of models used to create different schematics [22].
- **Layout Editor:** Enables editing and configuring the current design schematic.
- **Current Project:** Displays all files and components related to the current project [22].

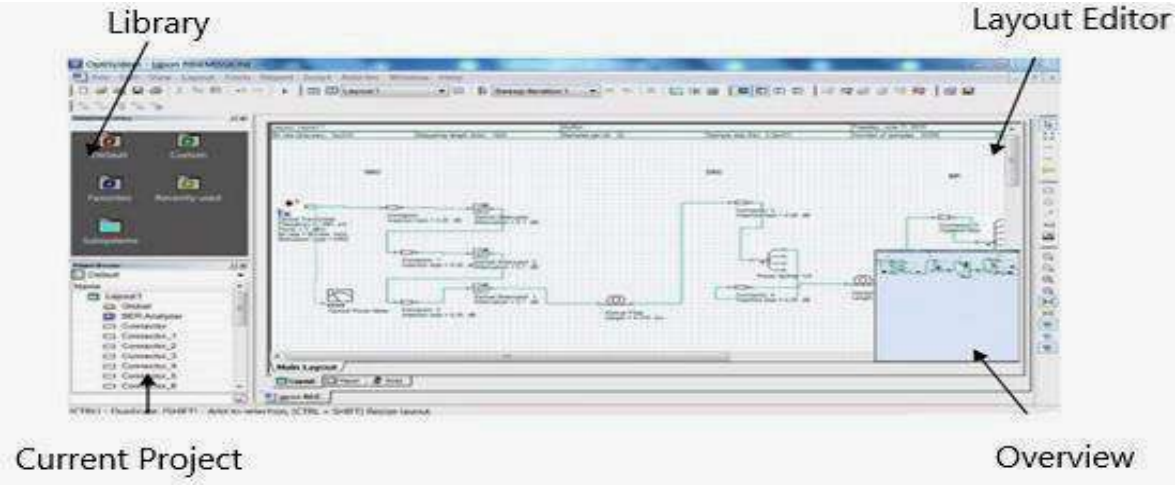

Figure 20:*OPTISYSTEM7.0Windows [22].*

Its extensive library of active and passive components includes realistic, wavelength-dependent parameters. These capabilities can be easily extended by adding new components and interfacing with a wide range of tools (Figure 21). A complete graphical user interface (GUI) manages the optical layout, component models, and their graphical representations (Figure 22) [23].

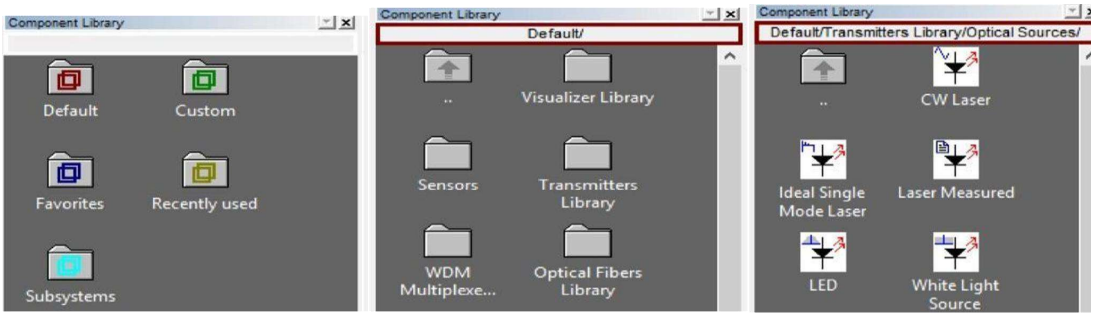

Figure 21:*Component Library.*

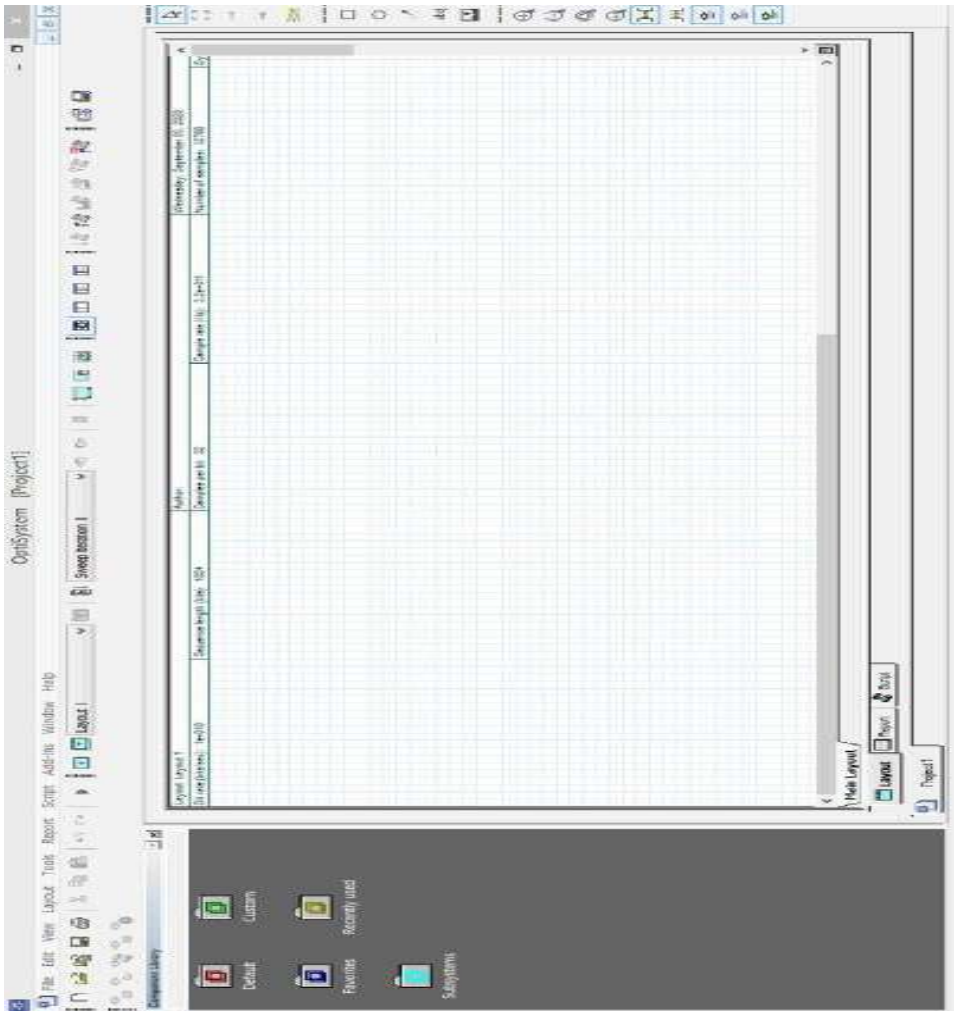

Figure 22:*Graphical user interface(GUI)[23].*

III.5 User-Defined Components

The **OptiSystem** component library contains a wide variety of components, all rigorously validated to ensure that simulation results closely match real-world scenarios:

- **Pseudo-Random Bit Generator:** Generates randomized binary sequences.
- **NRZ Pulse Generator:** Produces NRZ (non-return-to-zero) pulses.
- **CW Laser:** Simulates a laser-based optical transmitter.
- **Mach-Zehnder Modulator:** Modulates optical signals.
- **PIN Photo detector:** Converts light into electric current using a PIN design.
- **Low-Pass Bessel Filter:** Removes high-frequency components as a low- filter.

- **BER Analyzer:** Analyzes bit error rate (BER) and Q-factor.
- **DCF (Dispersion Compensation Fiber):** Supports transmission by compensating for dispersion.
    - **Ideal EDFA (Erbium-Doped Fiber Amplifier):** Amplifies optical signals.
    - **Loop Control:** Regulates signal propagation between input and output ports, simplifying system performance analysis based on parameters such as the number of EDFAs and fiber extensions.
    - **Optical Power Meter:** Measures and displays optical power.
    - **Oscilloscope:** Displays output signals [24].

III.6 Key Features Advantages of the Program

The main benefits of **OptiSystem** include:

- Providing an overview of fiber optic system performance.
- Evaluating parameter sensitivities to support design tolerance specifications.
- Visualizing design options for potential customers.
- Providing direct access to comprehensive system characterization datasets.
- Enabling automatic parameter scanning and optimization.

OptiSystem allows the automation and design of virtually any optical link at the physical layer and supports analysis across a wide range of optical networks. Users can plan, test, and simulate:

- Estimation of BER penalties for systems with different reception models [24].
- The virtual components in the library replicate the behavior and effects of real components based on the selected accuracy and efficiency.
- The component library allows entry of parameters measured from real devices and integrates with test and measurement equipment from various vendors .
- Advanced visualization tools generate spectral SAOS, audio signals, eye diagrams, polarization states, constellation diagrams, and more.

- Multiple displays can be attached to the same port on the monitor, supported by state-of-the-art data flow calculations [23].

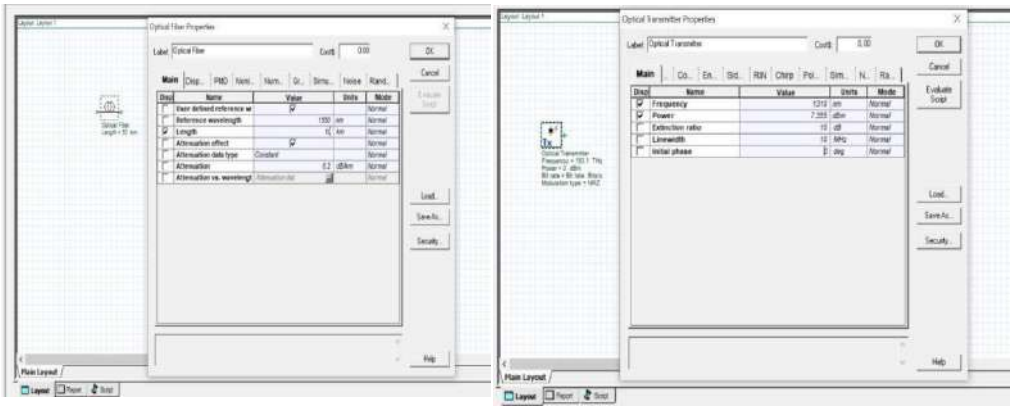

Figure 23:*Parameter component modification.*

III . 7 Transmission Quality Criteria

To ensure the proper functioning of a system, the transmitted sequence is compared to the received sequence. Transmission quality is assessed using three main criteria: the **quality factor (Q-factor)**, the **bit error rate (BER)**, and the **eye diagram**[24].

III.7.1 Quality Factor

In optical and digital communications, the Quality factor (Q-factor) evaluates the signal-to-noise ratio of a signal, as visualized by an eye diagram. A higher Q-factor indicates a more "open" eye, which translates to a lower Bit Error Rate (BER) and better overall transmission quality.

The Q-factor is mathematically calculated using the mean values and standard deviations of the signal's "1" level (high) and "0" level (low)[22]:

$$Q = \frac{\mu 1 - \mu 0}{\sigma 1 + \sigma 0} \quad \text{.....(2)}$$

Where:

· μ_1 and μ_0 = Mean amplitude (or voltage) of the "1" and "0" levels.

· σ_1 and σ_0 = Standard deviation (noise) of the "1" and "0" levels.

III.7.2 Bit Error Rate (BER)

If the Eye Diagram is the visual way to assess the quality of a digit al signal ,then the criterion that best quantifies this transmission quality is the Bit Error Rate (BER), which

represents the probability of an erroneous decision being made on a binary element. It is defined as follows [23]:

$$BER = 1/2\ erfc\left(Q/\sqrt{2}\right) \quad \text{.....(3)}$$

A system is generally considered to have good performance in optical telecommunication if the BER is less than a value of 10^{-9}, 10^{-12} or 10^{-15} depending on the specific systems requirements .

III.7.3 The eye diagram

The eye diagram represents the synchronous superposition of all the binary symbols in the transmitted sequence. It is the visual way to estimate the quality of a signal. The poorer the signal quality ,the more closed the eye diagram ,the lower the quality factor and thus the more difficult it is to detect the signal without error [22].

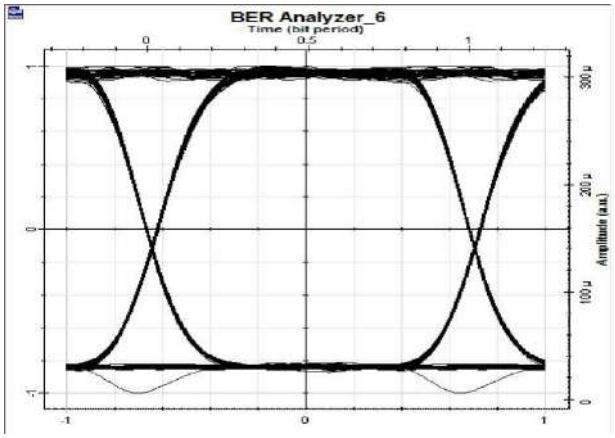

Figure 24:*The eye diagram [23].*

This diagram is characterized by:

- Temporal broadening of the signal pulses due to chromatic dispersion caused by interference between symbols.
- Temporal jitter caused by dispersion and coupling between the pulses and the amplified emission noise.
- In the link, the amplitude noise resulting from the accumulation of amplified emission noise on the signal throughout its path .

III.8 OptiSystem Applications

Among OptiSystem's various applications, we will mention the most commonly used ones :

- Design of optical communication systems from the component to the physical layer.
- Design of TDM/WDM and passive optical networks (PON).
- Design of SONET/SDH rings.
- Design of channel transmitters and amplifiers.

III. 9 System Model and Design:

The system is designed for communication over a fiber optic link between the BSs and CS for both uplink and downlink. a design for a 4-channel system to perform the detailed analysis as shown in Figure 25 . A point-to-point RoF architecture is employed in the system design [25].

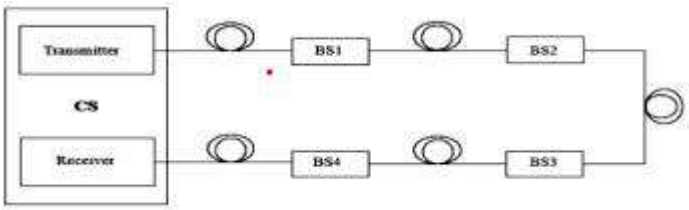

Figure 25:*Block diagram of the proposed RoF system model [25].*

- **Simulation Parameters :**

Table 4:*simulation parameters*

Parameters	Value
- Data rate	- 5 Gps
- Sequence length	- 1024
- Sample per bit	- 32
- Fiber length (ul)	- 50 Km
- Fiber length (inter Bs)	- 10Km
- Fiber attenuation	- 0.2 dB /km
- Fiber dispersion	- 16.75 ps / nm .km
- Wavelength BS1	- 1550 nm
- Wavelength BS2	- 1550.8 nm
- WavelengthBS3	- 1551.6 nm
- Wavelength BS4	- 1552.2 nm
- Power	- 1 dBm

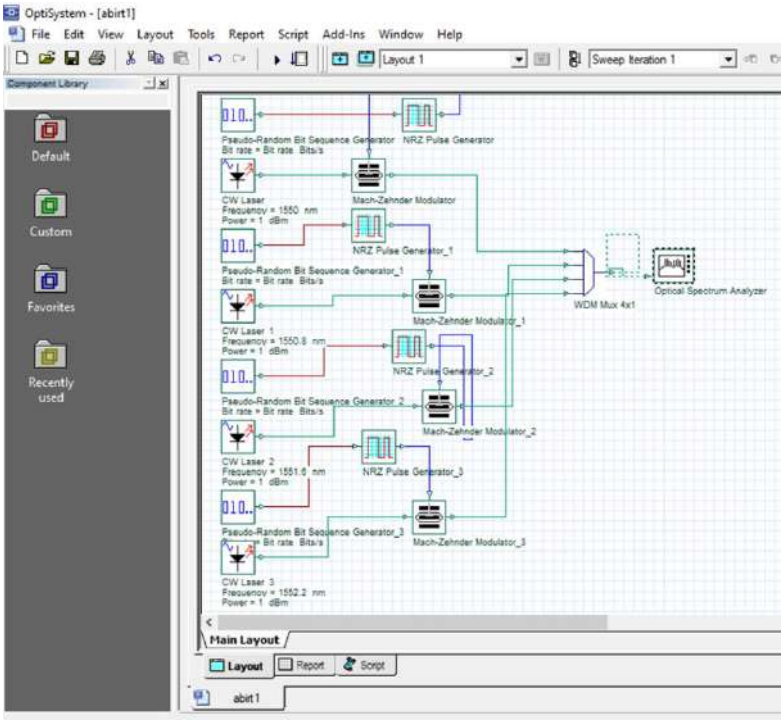

Figure 26:*simulation layout of the 4 – channel RoF transmitter in optisystem .*

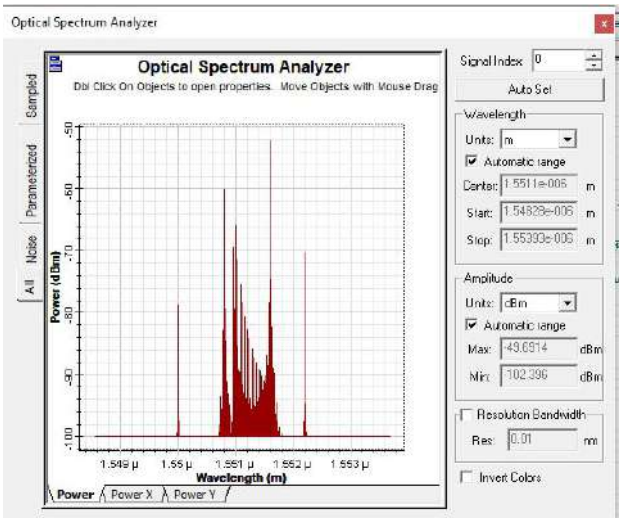

Figure 27:*optical spectrum of the 4-channel WDM signal at the transmitter output*

Technical Analysis : the figure above illustrates the optical spectrum of the multiplexed signals before transmission . as shown in the spectrum analyzer , four distinct peaks are clearly visible , corresponding to the four channels (BS1 , BS2 , BS3 and BS4) centered around the 1550 nm window . each peak represents a modulated optical carrier , and the

spacing between them confirms the efficiency of the signals while maintaining a sufficient guard band to prevent inter – channel interference .

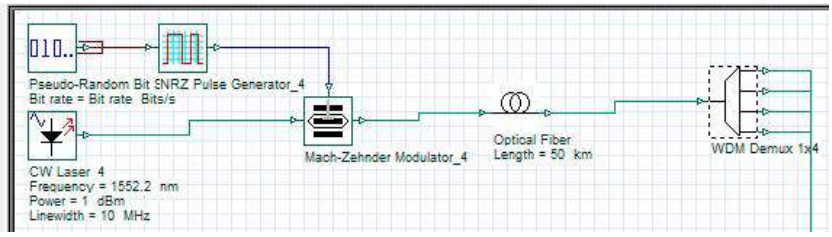

Figure 28 :*System Link Description*

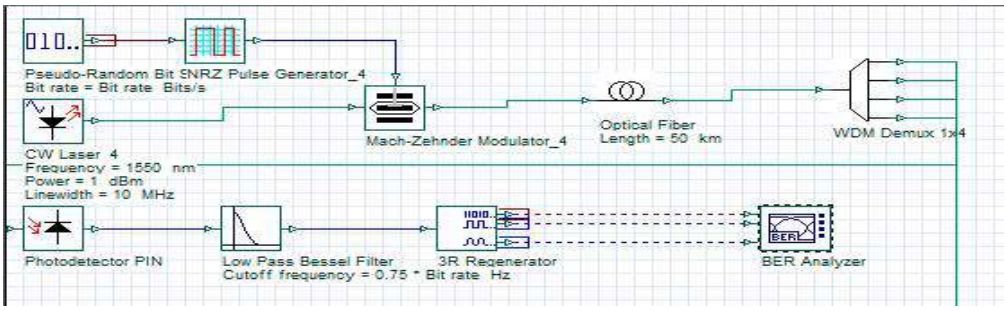

Figure 29 :*the receiver (complete) System Simulation*

The simulation setup shown in figure represents the comprehensive architecture of the proposed Radio over Fiber (ROF) system . to ensure a logical flow of the practical study the signal processing is analyzed through the following stages :

- Signal generation and modulation : the process begins with generating a 5 Gps digital signal , which is then converted into an optical from using a Mach – Zehnder Modulator (MZM) this stage is critical for maintaining signal integrity before it enters the transmission medium .
- Propagation through the optical link : the modulation signal travels through a single-mode fiber (SMF) . this stage is the core of our first study scenario , where we observe how different fiber lengths (varying) introduce attenuation and dispersion , affecting the final reception .
- Detection and quality Assessment : at the receiver side the Photodetector PIN converts the optical pulses back into electrical signals . to ensure the accuracy of our findings a Low Pass Bassel Filter and a 3R Regenerator are employed to clean the signel from noise before it reaches the BER Analyzer .

This integrated setup allows us to precisely extract the Eye Diagram and Q- Factor providing a clear quantitative measure of the systems performance under various physical constraints .

Impact Of Optical Fiber Length On Transmission Quality :

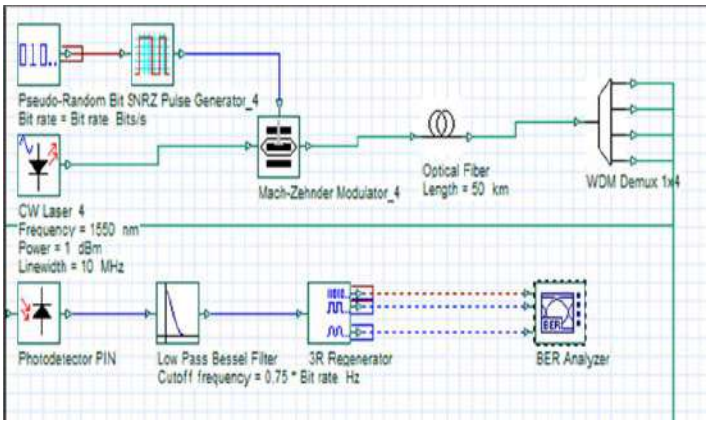

Figure 30:*simulation setup*

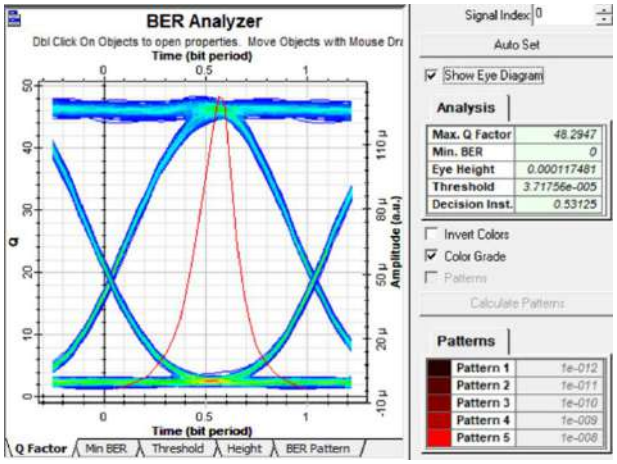

Figure 31:*Eye Diagram at 50 km*

1- Simulation Parameters and results Table :

This table summarizes both the input settings and the output performance of optical link :

Table 5*:results table at 50 km*

Parameter	Value
Optical Fiber Length	50 km
Max Q-Factor	48.2947
Min BER	0
Eye Height	0.000117481
Threshold	3.71756e-005

2- Results Analysis and Discussion :

– **Analysis of the results :**

Based on the simulation results shown in figure (simulation setup) and figure (Eye diagram) we can observe the following :

- **Signal Quality :** the system achieved a very high **Max Q – factor of 48.29** in optical communication , which indicates that our link at 50 km performs exceptionally .
- **Bit Error Rate (BER) :** the recorded Min BER is 0 confirming that the data transmission is error – free under the current physical constraints .
- **Eye Diagram :** the Eye Diagram exhibits a wide andclear **Eye opening .** this openness confirms that the signal suffers from minimal chromatic **Dispersion**

and **Noise** . the clear separation between the logic levels (0 and 1) ensures that the receiver can accurately recover the transmitted data .

At the distance of 50 km the optical link maintains high integrity . this setup demonstrates that the power levels and modulation techniques used are highly effective for this specific distance .

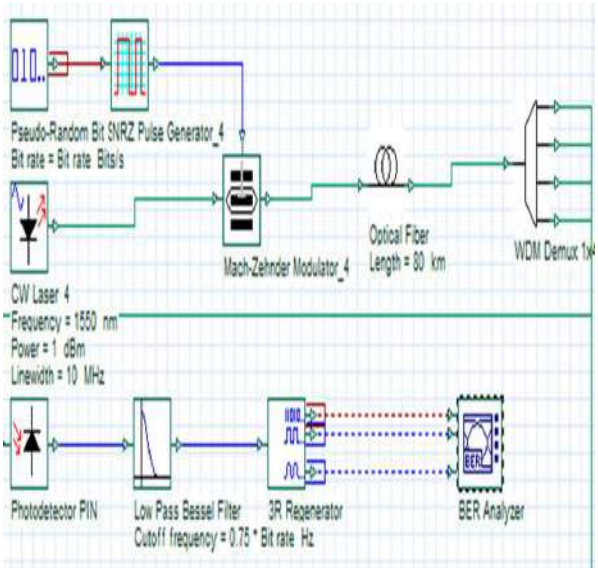

Figure 32:simulation setup

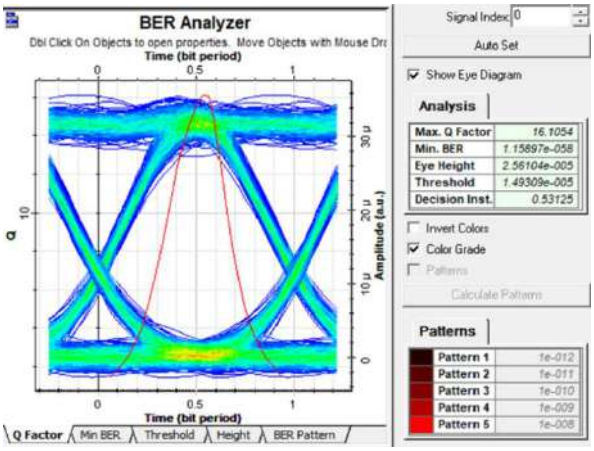

Figure 33:diagram Eye at 80 km

Table 6:results table at 80 km

Parameter	Value
Optical Fiber Length	80 km
Max Q-Factor	16.1054
Min BER	1.15897e-058
Eye Height	2.56104e-005
Threshold	1.49309e-005

- **Analysis of the results :**

Based on the simulation results shown in figure (simulation setup) and figure (Eye diagram) we can observe the following :

- **Signal Quality :** the system achieved a maximum quality factor (Max Q-Factor) Of 16.1054 although it decreased compared to the 50 km distance it remains within acceptable limits in optical communication , indicating that the link performs efficiently at a length of 80 km .

- **Bit Error Rate (BER) :** the system recorded a minimum error rate (Min BER) of 1.15897 . this value is very small and approaches zero , confirming that data transmission remains practically " error - free ." under the current physical constraints
- **Eye Diagram :** the Eye Diagram exhibits a clear and good Eye opening . this openness confirms that the signal , despite being subjected to some attenuation and **Dispersion** due to the increased distance , still maintains a clear separation between logic levels (0 and 1) .this ensures that the transmitted data .

At the distance of 80 km , the optical link maintains its integrity and reliability . this setup demonstrates that the power levels and modulation techniques used are highly effective for covering this long distance while maintaining excellent system performance .

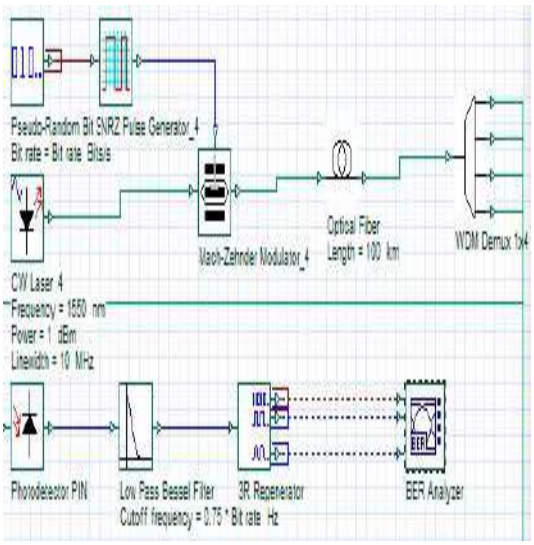

Figure 34:*simulation setup*

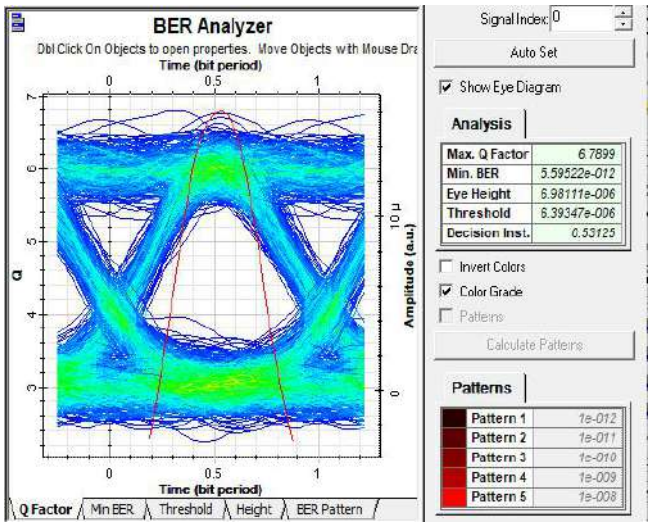

Figure 35:*diagram Eye at 100 km*

Table 7:*results table at 100 km*

Parameter	Value
Optical Fiber Length	100 km
Max Q-Factor	6.7899
Min BER	5.59522e-012
Eye Height	6.98111e-006
Threshold	6.39347e-006

- **Analysis of the results :**

Based on the simulation results shown in figure (simulation setup) and figure (Eye diagram) we can observe a clear degradation in system performance as the distance increases to 100 km :

- **Signal Quality :** the Max Q – Factor dropped significantly to 6.7899 compared to the previous distances . this decrease directly reflects the negative impact of long-distance transmission on signal clarity .
- **Bit Error Rate (BER) :** the Min BER increased to $5.59522e^{-012}$. although the system is still functional , this the signal is becoming more vulnerable interference and losses .
- **Eye Diagram :** the Eye Diagram shows a narrower and more distorted Eye opening the increased Dispersion and Noise at this distance have caused the signal traces to thicken . making it harder for the receiver to distinguish between logic levels compared to shorted distances .

At 100 km the system reaches its performance limits . the results prove that increasing the fiber length leads to higher signal attenuation and dispersion , which eventually degrades the overall reliability of the optical link .

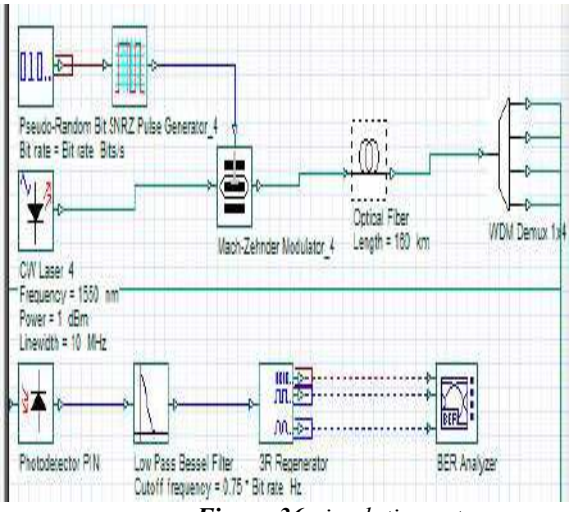

Figure 36:*simulation setup*

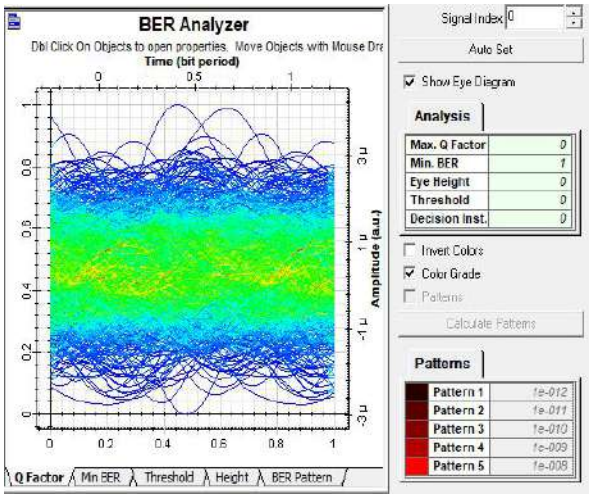

Figure 37:*diagram Eye at 160 km*

Table 8:*results table at 160km*

Parameter	Value
Optical Fiber Length	160 km
Max Q-Factor	0
Min BER	1
Eye Height	0
Threshold	0

- **Analysis of the results :**

Based on the simulation results shown in figure (simulation setup) and figure (Eye diagram) we can observe a clear degradation in system performance as the distance increases to 160 km :

- **Signal Quality :** the system achieved a **Max Q-Factor of 0** . this indicates that the signal quality has completely degraded and the system can no longer distinguish between the transmitted bits due to the extreme distance .
- **Bit Error Rate (BER) :** the recorded **Min BER is 1 ,** confirming that the data transmission is entirely unsuccessful and filled with errors . At this distance , the link fails to meet any communication standards .
- **Eye Diagram :** the Eye diagram is completely closed , showing **no Eye-opening** this confirms that the signal is overwhelmed by **Noise** and **Dispersion** making it impossible for the receiver to recover any transmitted data **.**

The distance of 160 km represents a ^ break point ^ for the current system , where it completely loses the ability to transmit information this is evidenced by a **Max Q – Factor of 0** and **the Min BER of 1** . the total closure of the Eye diagram confirms that the signal is entirely overwhelmed by **Noise** and **Dispersion** , making data recovery impossible at the receiver side . therefor , the system fails to meet any communication standards at this distance

Impact of Laser Input Power On Transmission Performance :

In this section , the RoF system performance was simulated by sweeping the laser input power across arrange values . this was conducted to analyze how varying power levels influence the overall signal reception quality

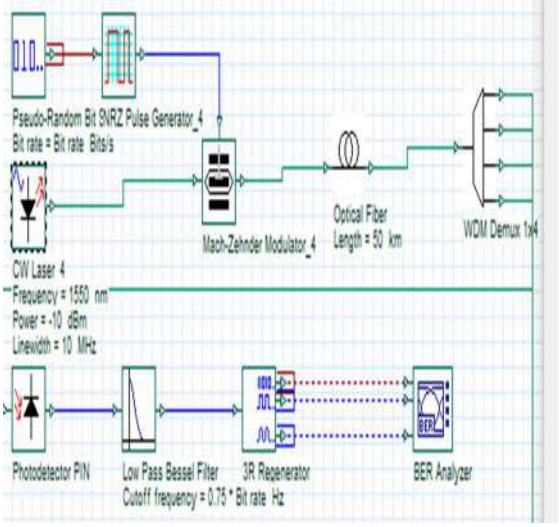

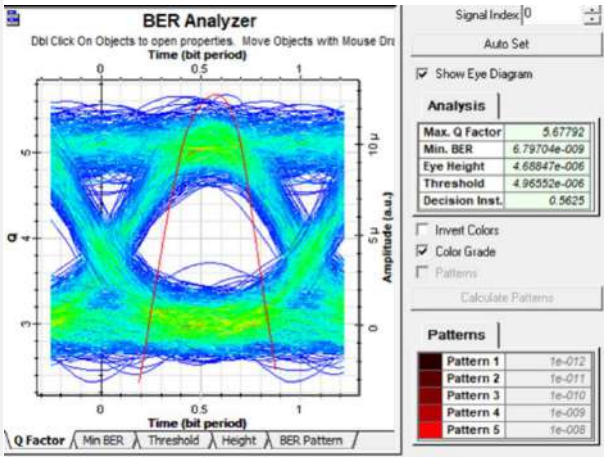

Figure 38:*simulation setup*

Figure 39:*diagram Eye at power -10 dBm*

Table 9:*results table at – 10 dbm*

Parameter	**Value**
Optical Fiber Length	50 km
Power	-10
Max Q-Factor	5.67792
Min BER	6.79704e-009
Eye Height	4.68847e-006
Threshold	4.96552e-006

- **Analysis of the results :** this illustrates the performance of the radio over fiber (RoF) system at a low launch power of – 10 dBm over a transmission distance of 50 km . the eye diagram analysis reveals a clear yet relatively narrow eye opening with significant noise traces in the upper and lower level due to a reduced signal – to – Noise Ratio (SNR) a Q-Factor of 5.67 and a BER of 6.79 x $10e^{-9}$ representing a marginal performance that is close to the standard acceptable thresholds .

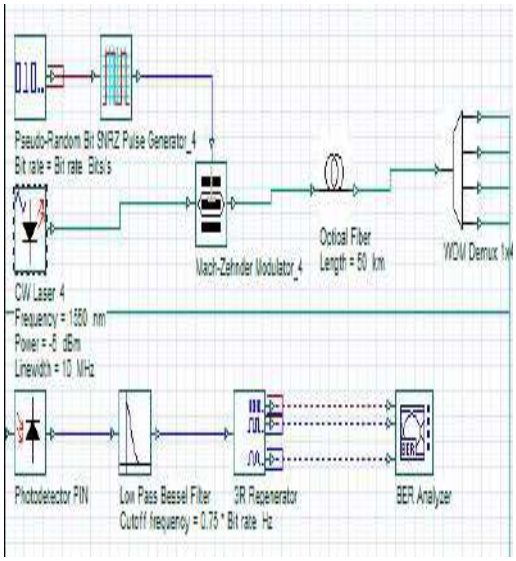

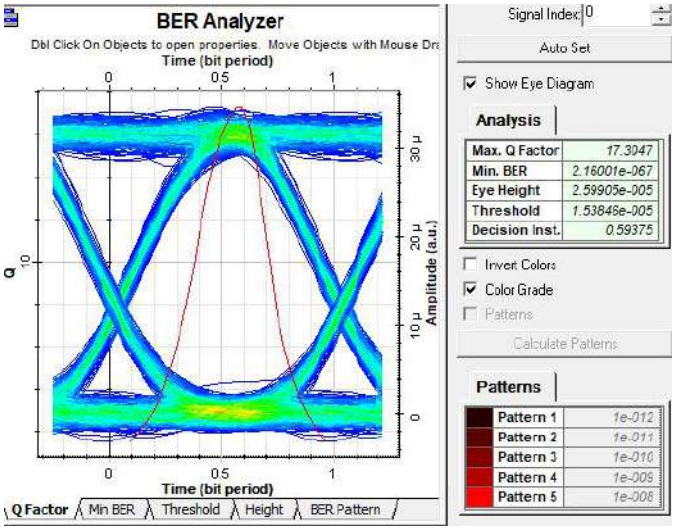

Figure 40:*simulation setup* ***Figure 41:****diagram Eye at power -5 dBm*

Table 10:*results table at -5dbm*

Parameter	**Value**
Optical Fiber Length	50 km
power	-5
Max Q-Factor	17.3047
Min BER	2.16001e-067
Eye Height	2.59905e-005
Threshold	1.53846e-005

- **Analysis of the results :** this figure demonstrates the significant enhancement in system efficiency when increasing the launch power to -5 dBm for a 50 km fiber link . the eye diagram exhibits a wide and clean opening , indicating a substantial improvement in the detected signal quality and a reduction in inter – symbol interference . this optimization resulted in a Q- factor surge to 17.30 and a negligible BER of 2.16 e^{-067} confirming that the system is operating within its optimal performance regime .

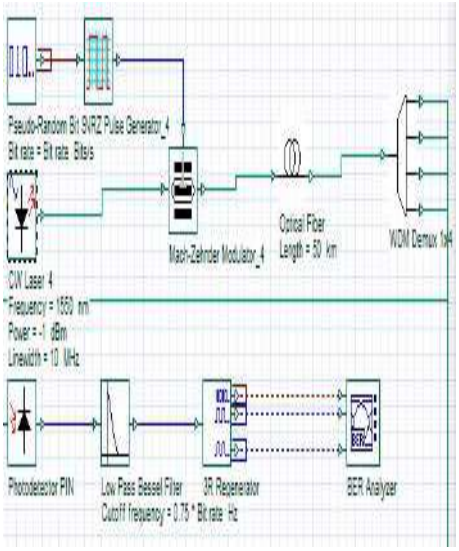

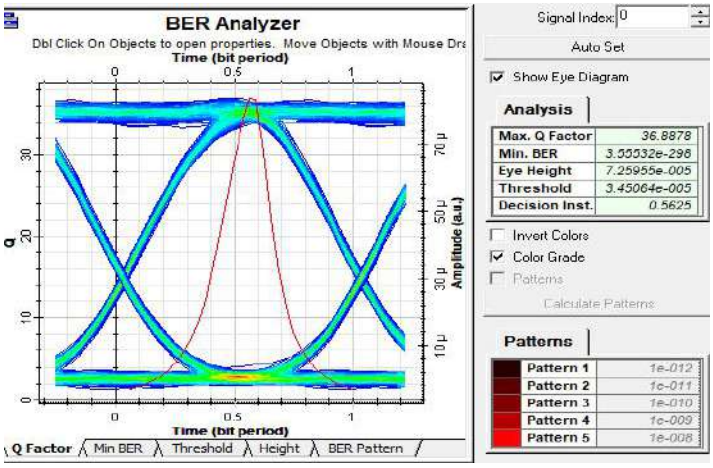

Figure 42:*simulation setup*

Figure 43:*diagram Eye at power -1 dBm*

Table 11:*results table at -1 dbm*

Parameter	Value
Optical Fiber Length	50 km
power	-1
Max Q-Factor	36.8878
Min BER	3.55532e-298
Eye Height	7.25955e-005
Threshold	3.45064e-005

- **Analysis of the results :** this figure showcases the optimal performance results of the RoF system when the launch power is increased to -1 dBm over a 50 km fiber link , the eye diagram analysis reveals a wide – open and ultra eye pattern , with a near – total absence of optical interference , indicating the highest achievable signal integrity for this configuration . the numerical results demonstrate superior performance , with the Q- factor surging to 36.88 and the BER dropping to an infinitesimal value of $3.55532e^{-298}$. this case confirms that the system has reached its peak operational efficiency , ensuring exceptional stability for the transmitted data .

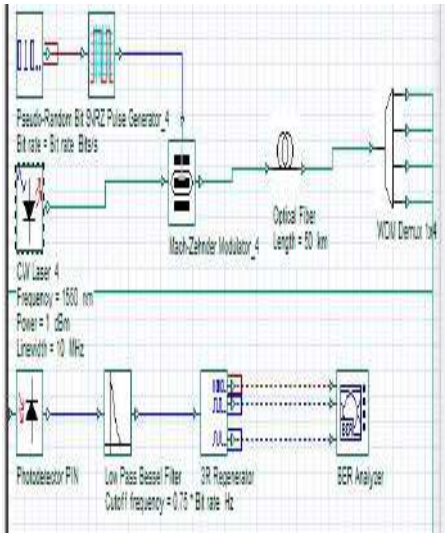

Figure 44:simulation setup

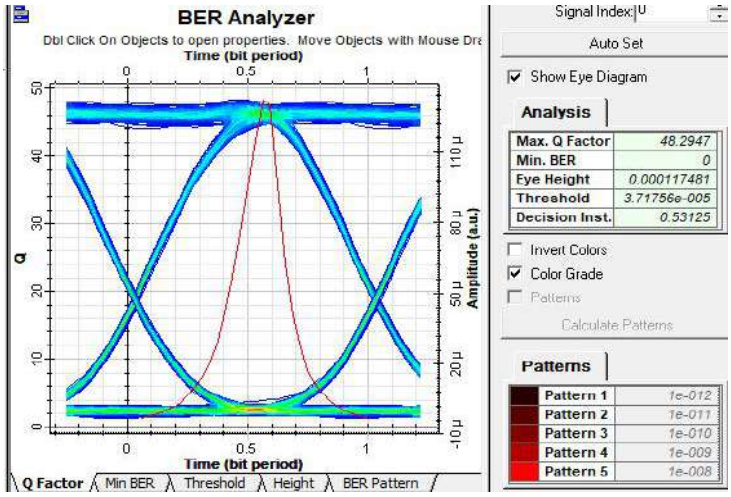

Figure 45:diagram Eye at power 1 dBm

Table 12:results table at 1dbm

Parameter	Value
Optical Fiber Length	50 km
power	1
Max Q-Factor	48.2947
Min BER	0
Eye Height	0.000117481
Threshold	0.53125

- **Analysis of the results :** this figure illustrates the peak performance of the RoF system at a positive launch power of a 1 dBm over a 50 km fiber spam . the eye diagram exhibits perfect stability and trace alignment , reflecting the highest possible integrity for the detected digital signal . According to the numerical results , the system achieved a record Q- factor of 48.29 , while the Bit Error Rate (BER) recorded an absolute zero (0) . these results confirm that increasing the power to this level has completely mitigated the effects of Noise and interference , ensuring an ideal data transmission with zero information loss .

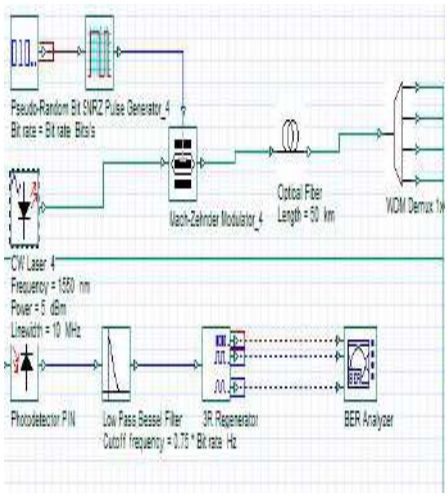

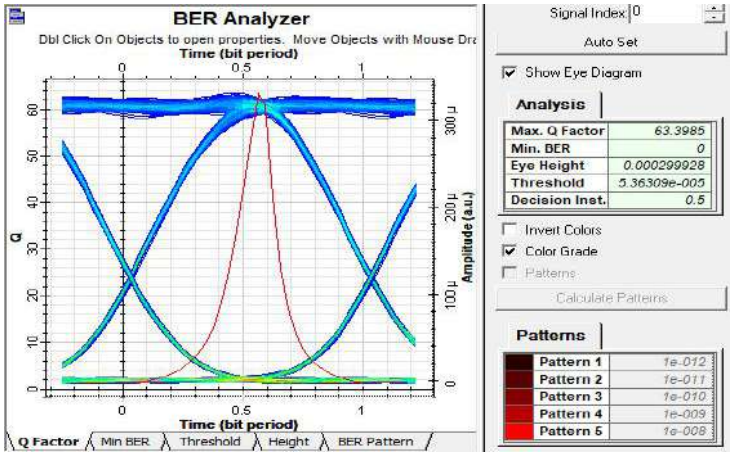

Figure 46:*simulation setup*

Figure 47:*diagram Eye at power 5 dBm*

Table 13:*results table at 5 dbm*

Parameter	Value
Optical Fiber Length	50 km
power	5
Max Q-Factor	63.3965
Min BER	0
Eye Height	0.000299928
Threshold	0.5

- **Analysis of the results :** this figure represents the peak technical performance of the RoF system at a high launch power of 5 dBm over a 50 km distance . the eye diagram displays an ultra –clean geometric pattern with an extremely wide eye opening , indicating the total absence of inter- Symbol interference or diagnostic noise . based on the numerical results , the system recorded its highest Q-factor of 63.39 while findings confirm that increasing the power to this level provided an extensive safety margin against attenuation and noise , ensuring maximum reliability in optical data transmission .

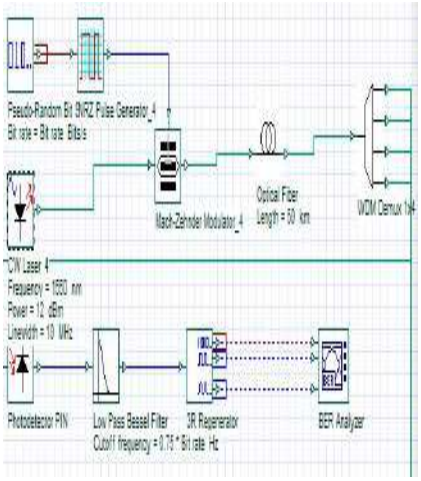

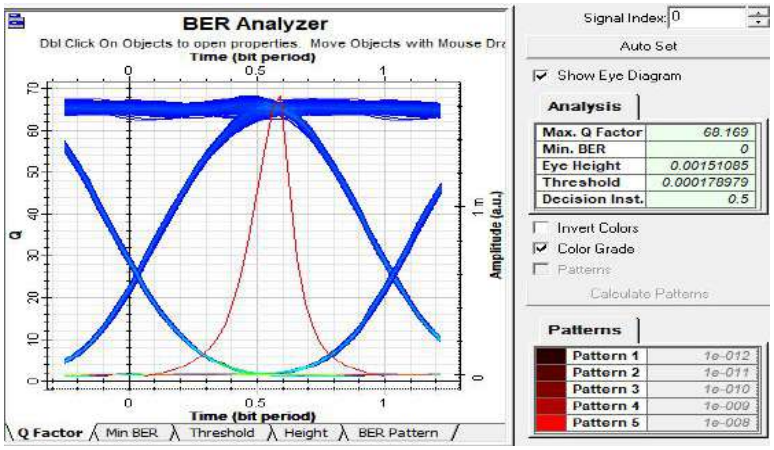

Figure 48:*simulation setup* ***Figure 49:*** *diagram Eye at power 12 dBm*

Table 14:*results table at 12dbm*

Parameter	Value
Optical Fiber Length	50 km
power	12
Max Q-Factor	68.169
Min BER	0
Eye Height	0.000178979
Threshold	0.5

- **Analysis of the results :** this figure illustrates the performance of the RoF system at the highest launch power used in the simulation 12 dBm , over a 50 km fiber link the eye diagram displays superior stability and an ideal wide eye opening , reflecting the maximum signal integrity with the total absence of interference . Numerically the system achieved a record Q –factor of 68.16 while the BER remained at absolute zero . these results confirm that the system is operating at its technical peak , where the high launch power provides full immunity against noise and ensures 100 % data integrity .

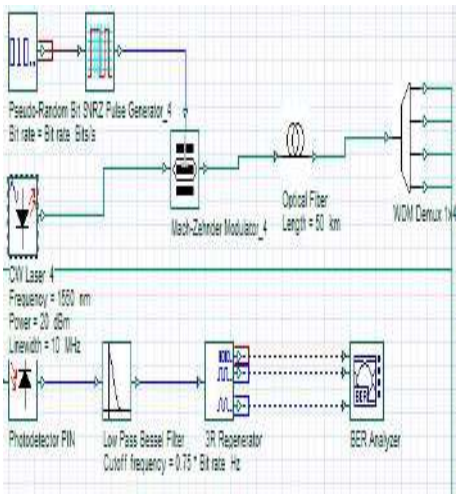

Figure 50:simulation setup

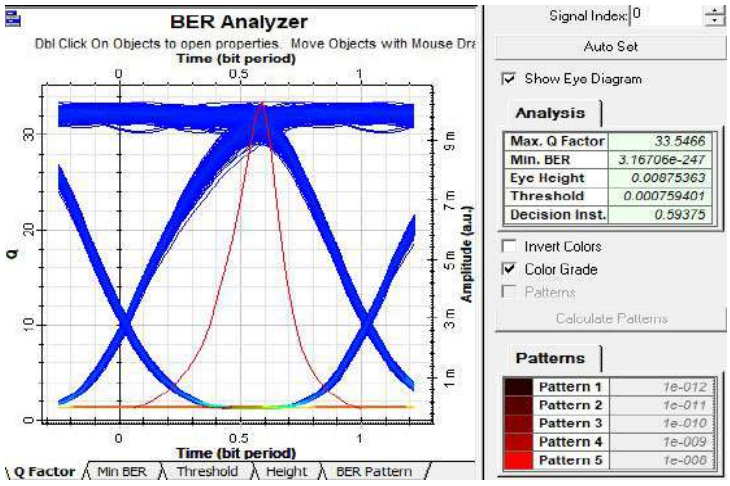

Figure 51:diagram Eye at power 20 dBm

Table 15:results table at 20 dbm

Parameter	Value
Optical Fiber Length	50 km
power	20
Max Q-Factor	33.5466
Min BER	3.16706e-247
Eye Height	0.00875363
Threshold	0.000759401

- **Analysis of the results :** this figure illustrates the performance of the RoF system at a very high launch power of 20 dBm over a 50 km fiber link . technically . it is observed that the Q – factor has decreased to 33.54 compared to the previous case (12 dBm) , and the BER has reappeared with a value of $3.16706e^{-247}$ the diagram shows a noticeable thickening in the upper signal traces , indicating the on set of Non – linear distortion caused by excessive power . these results confirm that the system has surpassed its * optimal efficiency point * where increasing power beyond a certain threshold degrades signal quality instead of improving it due to physical phenomena such as the Kerr Effect .

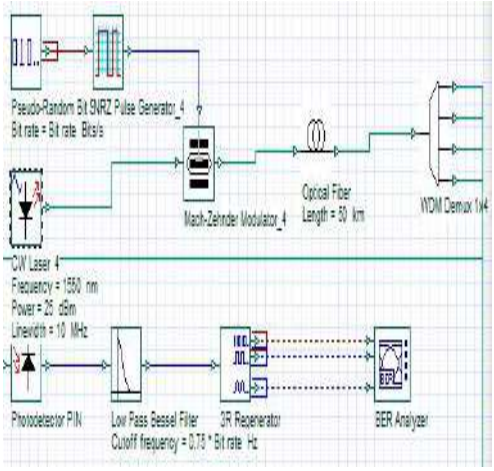

***Figure 52**:simulation setup*

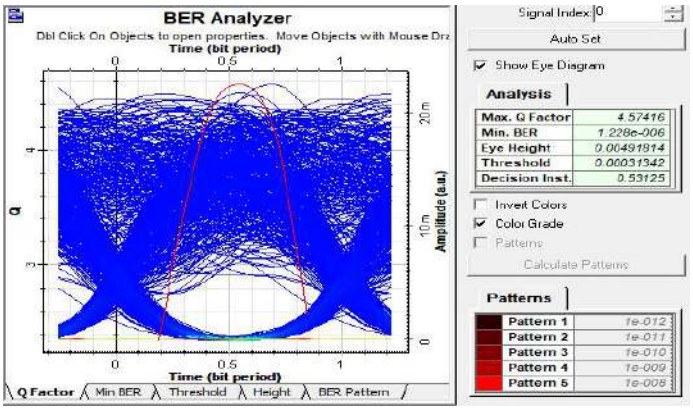

***Figure 53:**diagram Eye at power 25 dBm*

***Table 16:**results table at 25 dbm*

Parameter	Value
Optical Fiber Length	50 km
Power	25
Max Q-Factor	4.57416
Min BER	1.228e-006
Eye Height	0.00491814
Threshold	0.00031342

- **Analysis of the results :** this figure illustrates the performance of the RoF system at an excessive launch power of 25 dBm over a 50 km fiber link . the Eye diagram analysis reveals a clear breakdown in signal quality with a significantly closed eye opening due to severe distortion noise . the Q – factor has dropped sharply to 4.57 , while the BER has risen significantly to $1.228e^{-006}$. these results confirm that the system has entered a regime of deep non – linear distortion , proving that exceeding the allowable power limits leads to counterproductive outcomes **,** rendering the signal technically unusable despite the high transmission power .
- **System Performance Summary :**
    - Low Power Level (-5 to -10 dBm) : poor performance characterized by a Low signal - to –noise ration (SNR) , where the system is primarily Noise – Limited .

- Moderate Power Level (1 to 12 dBm) : optimal and progressive performance within the Linear Region , where the Q – factor improves significantly and the (BER) reaches zero .
- Excessive Power Level (20 to 25 dBm) : sharp degradation in signal integrity due to fiber non – linearity's , where the system becomes Non – linear limited

Comparative Table :

Table 17:*Comparative Table*

Launch Power (dBm)	**Max Q-factor**	**Min BER**	**System Status**
-10	5.67	6.79x 10 ^-9	Marginal (noise limite)
-5	17.30	2.16x 10^-67	Stable (linear)
-1	36.88	3.55x 10^-298	High performance
1	48.29	0	Optimal (ideal)
5	63.39	0	Peak performance
12	68.16	0	Saturation point
20	33.54	3.16x10^-247	Non linear distortion
25	4.57	1.22x10^-6	System breakdown

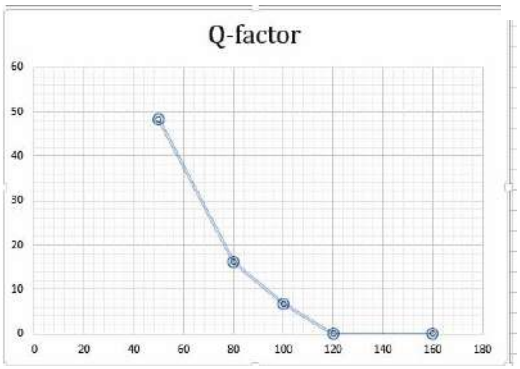

Q –factor as a function of length

Table 18:*measured Q-factor for Different lengths*

	A	B
1	lenght	Q-factor
2	50	48,2947
3	80	16,1054
4	100	6,7899
5	120	0
6	160	0

The curve illustrates the performance of the radio over fiber (ROF) system where the optical fiber length serves as the independent variable and its impact on the receivers Q- factor is monitored it is observed that the system exhibits excellent performance delivering a high quality factor Q = 48.3 at a relatively short distance(50 km depending on the simulation unit) subsequently the curve undergoes a sharp and rapid exponential –like decay in Q –

factor values as the fiber length increases ultimately dropping to zero Q = 0 at extended distance (120 and 160 km) .

Table19:*measured Q-factor for different power levels*

power	Q-factor
-10	5,67792
-5	17,3047
-1	36,8878
1	48,2947
5	63,3985
7	66,211
12	68,169
20	33,5466
25	4,57416

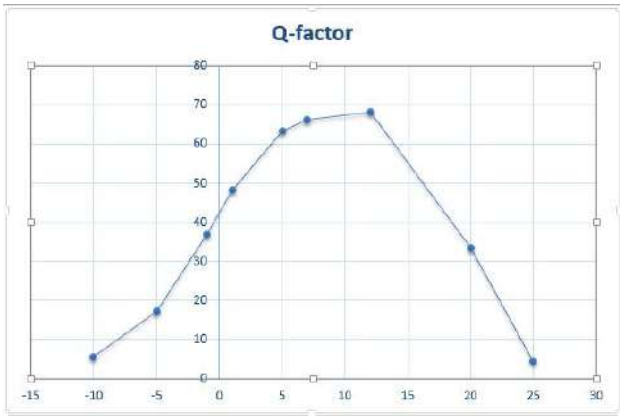

Q-factor as a function of input power

The curve depicts the response of the ROF Link to variations in either the optical input laser power or the Rf signal power injected into the optical modulator such as the (MZM) the curve exhibits a distinct nonlinear behavior characterized by a convex or bell – shaped profile where the Q factor improves with increasing power from -10 unit it reaches its optimal peak Q = 68.1 at a power level of 12 beyond this critical value the performance abruptly reverses and the Q factor undergoes a sharp degradation dropping to 4.5 at a power level of 25 .

Performance Enhancement using FBG :

In Radio over Fiber (RoF) systems, Fiber Bragg Gratings (FBGs) are crucial optical components that eliminate dispersion-induced power fading, filter specific wavelengths, and provide optical delay or phase shifting. They are passive, all-optical devices written directly into optical fibers, making them essential for stabilizing high-frequency wireless and 5G/6G signals over long transmission distances.Chromatic dispersion in standard single-mode fiber causes radio frequency (RF) signal power fluctuations, known as dispersion power fading. Chirped FBGs can be tuned to apply negative dispersion, perfectly neutralizing these losses.

In Wavelength-Division Multiplexing (WDM) RoF systems, FBGs serve as highly precise optical filters that extract or route specific wavelengths (downlink and uplink channels) to remote antenna units [25].

The experimental data presented in table indicates a substantial decline in the system quality factor when the laser input power exceed 12dBm specifically the Q-factor drops from

its peak to 33.54 at 20dBm , and reaches a critical low of 4.57 at 25dBm . This performance degradation is mainly attributed to the onset of fiber non –linearity's and chromatic dispersion within the optical link at elevated power levels , these phenomena induce severe phase noise and pulse spreading . limiting the system high – power operation .

To counteracted these dispersive and non-linear impairments a fiber Bragg Grating (FBG) filter was incorporated into the Radio over fiber (RoF) :

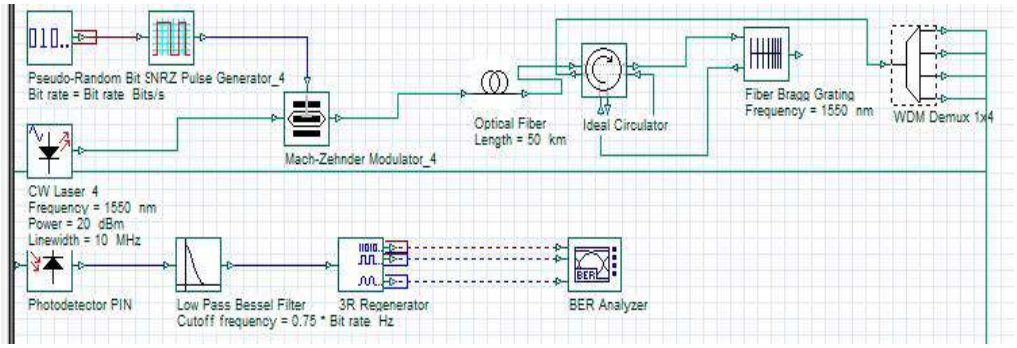

Figure 54:*Simulation schematic of RoF receiver part with fiber Bragg grating.*

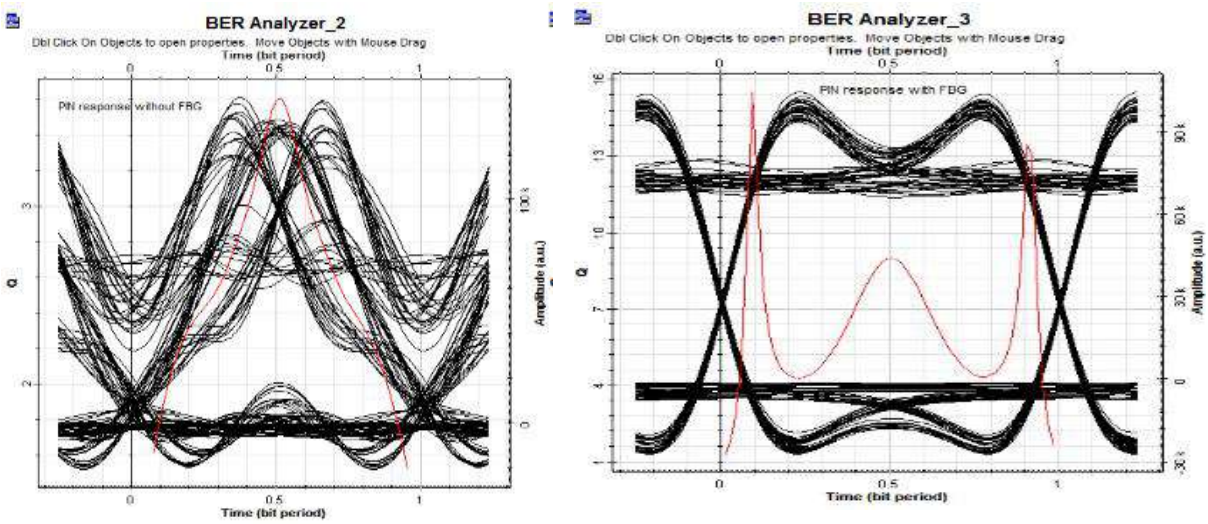

Figure 55: *(a) PIN Response before FBG over 50 Km / (b) PIN response after FBG over 50 km*

Table 18:*Numerical results PIN as receiver.*

PIN Receiver

	Without FBG	With FBG
Q-Factor	3.61174	15.5166
BER	0.000124989	1.3385e-54

Comparative Analysis of PIN receiver Eye diagrams (Before , After FBG) :

The analysis of the Eye diagram provides a direct visual evaluation of the clarity and quality of the recovered digital signal :

- **Without FBG :** in the scenario where the signal is received by the PIN receiver without utilizing the FBG the eye diagram appears almost completely closed and severely distorted this visual degradation and the random , overlapping paths of the signal traces are a direct consequence of the accumulated chromatic dispersion over the 50 km fiber link . this geometrically demonstrates the receptors between the logical levels of the signal (0and 1)thereby significantly increasing the BER and inter –symbol interference **.**
- **With FBG :** upon integrating the FBG unit into the system , a radical transformation is observed , characterized by a distinct and wide – open eye pattern the diagram exhibits sharp , well – defined trajectories that clearly separate the logical 0 and 1 levels . this visual improvement conclusively validates the effectiveness of the FBG in chronologically , re- aligning the delayed wavelengths , restoring the optical pulse shape , and successfully mitigating inter-symbol interference .

Numerical performance Validation of the Proposed Model :

To support the qualitative visual findings obtained from the eye diagram , quantitative numerical data were extracted from the simulation environment and compiled . the performance metrics for the PIN receiver configuration are summarized in the table below:

- **Quality Factor (Q –factor) :** in the absence of the dispersion compensator , the system registered a critically low Q- factor of 3.61174 however upon implementing the FBG technology this value exhibited a substantial increase – approximately a4.3 fold improvement – reaching 15..5166 from an engineering perspective this remarkable enhancement signifies a monumental leap in signal purity , noise reduction , and overall transmission reliability .
- **Bit Error Rate (BER) :** the numerical readings indicated that without the integration of the dispersion compensation mechanism , the system suffered from a relatively high BER of 0.000124989 .

$$\mathbf{BER = \tfrac{1}{2}\, erfc\left(Q/\sqrt{2} \right)}$$

III.10 Conclusion :

It is concluded from the current study that the utilization of a fiber Bragg Grating (FBG) as a chromatic dispersion compensator an radio over fiber (RoF) system represents a highly efficient , adaptive and cost – effective solution this technology significantly contributes to simplifying the overall system architecture by eliminating several complex electronic components and replacing them with a straightforward power splitter . both qualitative visual and quantitative numerical results demonstrate the capability of the FBG to elevate the quality factor of the PIN receiver configuration to over 15.5 , while simultaneously driving the BER down to an infinitesimal order of magnitude .

Consequently these findings open broad horizon for the deployment of this technique in next –generation communication networks .

General Conclusion

In this dissertation, a comprehensive study of Radio over Fiber (RoF) communication systems has been presented with a focus on optical fiber transmission performance and signal quality analysis. The work began with an overview of optical fiber communication technologies and the fundamental principles of RoF systems, highlighting their importance in modern high-speed telecommunication networks.

The study then focused on the theoretical analysis of optical fiber characteristics, transmission impairments, optical sources, photodetectors, and multiplexing techniques used in optical communication systems. Particular attention was given to the challenges affecting RoF performance such as attenuation, chromatic dispersion, nonlinear effects, and signal degradation over long transmission distances.

In the practical part of this work, the proposed RoF system was designed and simulated using OptiSystem software. Different simulation scenarios were implemented in order to investigate the impact of optical fiber length and laser launch power on transmission quality. The system performance was evaluated using several important indicators including Quality Factor (Q-Factor), Bit Error Rate (BER), and Eye Diagram analysis. In addition, Fiber Bragg Grating (FBG) technology was introduced as a compensation technique to improve signal quality and reduce transmission impairments.

The simulation results obtained throughout this work demonstrated that the performance of the Radio over Fiber system is strongly dependent on both transmission distance and laser launch power.

The analysis of fiber length variation showed that increasing the transmission distance causes significant degradation in signal quality due to attenuation and chromatic dispersion. At moderate distances such as 50 km and 80 km, the system maintained excellent transmission quality with high Q-Factor values and extremely low BER levels. However, when the transmission distance reached 100 km, the system began to suffer from noticeable signal degradation. At 160 km, the communication link completely failed due to excessive losses and severe dispersion effect . The investigation of laser launch power also revealed that system performance improves progressively when the optical power increases within the linear operating region. The best system performance was achieved between 1 dBm and 12 dBm, where the Q-Factor reached very high values and the BER approached zero.

Nevertheless, excessive optical power beyond the optimal operating threshold introduced nonlinear optical effects inside the fiber, leading to signal distortion and deterioration in communication quality.

The integration of Fiber Bragg Grating (FBG) technology proved effective in compensating chromatic dispersion and improving signal stability under high-power operating conditions. The obtained results confirmed the importance of dispersion compensation techniques in enhancing the reliability and efficiency of optical communication systems.

The main contributions of this dissertation can be summarized as follows:

• Design and implementation of a multi-channel Radio over Fiber communication system using OptiSystem software.

• Detailed evaluation of the influence of optical fiber length on system performance and transmission reliability.

• Investigation of the effect of laser launch power variation on Q-Factor, BER, and Eye Diagram characteristics.

• Identification of the optimal operating region for efficient and stable optical transmission.

• Improvement of system performance using Fiber Bragg Grating technology to reduce dispersion and nonlinear impairments.

• Presentation of a complete simulation-based analysis that contributes to the understanding and optimization of RoF communication systems.

Despite the satisfactory results achieved in this work, several limitations remain associated with the proposed study.

First, the analysis was based entirely on simulation using OptiSystem software without experimental hardware implementation. Therefore, practical environmental conditions and hardware imperfections were not fully considered.

Second, the study focused mainly on the impact of transmission distance and laser launch power, while other important parameters such as polarization effects, temperature variations, phase noise, and advanced modulation techniques were not deeply investigated.

In addition, the proposed system was evaluated for a limited number of channels and fixed transmission configurations, which may not fully represent large-scale real communication networks.

Future research may focus on extending this work by implementing experimental validation of the proposed Radio over Fiber system using real optical communication equipment.

Additional studies may also investigate the use of advanced modulation formats, coherent detection techniques, machine learning optimization methods, and higher-capacity WDM systems to further improve transmission performance.

Moreover, future work can explore the integration of Radio over Fiber technology with next-generation communication systems such as 5G and 6G networks, cloud radio access networks (C-RAN), and millimeter-wave communication systems.

Finally, more advanced compensation methods may be studied in order to mitigate nonlinear effects and chromatic dispersion over ultra-long transmission distances while maintaining high transmission quality and system stability.

Combined as WDM-RoF, this telecommunications technology transmits multiple Radio Frequency (RF) signals over a single optical fiber by assigning each signal a different color of light (wavelength). It serves as a high-bandwidth backbone for 5G, 6G, and wireless networks.

Instead of sending raw digital data, radio signals from cellular antennas are converted into light and transmitted over optical fibers. This keeps antenna-tower hardware simple and moves complex signal processing to a central station.

By using lasers with distinct optical wavelengths (colors), multiple wireless channels can be transmitted over the same fiber simultaneously. By combining WDM and RoF, network operators can transmit hundreds of gigabits—and sometimes terabits—of data per second over dozens of kilometers.

Telecom companies don't need to lay a separate fiber for each wireless signal. They can stack multiple signals on a single fiber. Next-Gen Support: It seamlessly connects wired optical networks with wireless access points, a crucial requirement for high-speed 5G/6G deployments and urban traffic routing.

References

[1] V. yadav, A. k. Jaiswal and M. Kumar, "Radio over Fiber Technology,"*IOSR Journal of Electronics and Communication Engineering (IOSR-JECE),* vol. 9, no. 3,Ver.1, pp. 83-87, May-Jun 2014.

[2] S. Kaur, M. Srivastava and K. S. Bhatia, "Radio over Fiber Technology - A Review,"*Research Cell: An International Journal of Engineering Sciences,* no. Special Issue ICTMS-15, pp. 85-89, 2015.

[3] L. Hai-Han, "Full-Duplex Radio-on-Fiber Transport System Based on Main and Multiple Side Modes Injection-Locked DFB Laser Diode,"*Institute of Electro-Optical Engineering, National Taipei University of Technology,* 2008.

[4] L. Hai-Han, "A Full-Duplex Radio-on-Photonic Crystal Fiber Transport System,"*IEEE Photonics Technology Letters,* vol. 19, no. 11, 2007.

[5] T. T. Pham, "Bidirectional 1.25-Gbps WDM-PON with Broadcasting Function Using A Fabry-Perot Laser Diode and RSOA,"*Journal of the Optical Society of Korea,* vol. 12, no. 4, December 2008.

[6] H.-C. Ji, " Full-Duplex Radio-Over- Fiber System using Phase-Modulated Downlink and Intensity-Modulated Uplink,"*IEEE Photonics Technology Letters,* vol. 21, no. 1, 2009.

[7] P. M. Gabla, "1111 km, Two-Channel IM-DD Transmission Experiment at 2.5 Gb/s Through 21 In-Line Erbium-Doped Fiber Amplifiers,"*IEEE Photonics Technology Letters,* vol. 21, no. 1, 2009.

[8] M. Zhu, L. Zhang, J. Wang, L. Cheng, C. Liu and C. Gee-Kung, "Radio-Over-Fiber access architecture for integrated broadband wireless services,"*Journal of Lightwave Technology,* vol. 31, pp. 3614-3620, 2013.

[9] J. John and S. Shashidharan, "Design and Simulation of a Radio over Fiber System and its Performance Analysis.," in *Optical Networking Technologies and Data Security - OPNTDS*, 2012.

[10] H. Sharma and A. Singh, "PAPR Reduction techniques in OFDM System: Review,"*International Journal of Engineering Trends and Technology (IJETT),* vol. 31, no. 4, January 2016.

[11] K. S. Bhatiaa and S. Singh, "Performance Analysis of RoF link using Mach-Zehnder Modulator and its parameters,"*An International Journal of Engineering Sciences (Special Issue ICTMS-15),* 29-30 December 2015.

[12] A. L. Halidou Bachirou and K. Soulymane, "Étude et planification du réseau FTTH pour les transmissions à haut débit," 2017.

[13] B. M. Benabdellah and B. T. Abdelhak, *Techniques instrumentales dédiées aux communications optiques, Master's Thesis, University of Tlemcen,* 2019.

[14] A. Saàda and R. Seddaoui, *Etude et caractérisation des architectures G-PON et X-GPON pour le réseau FTTH, Master's Thesis, University of Mostaganem,* 2021.

[15] HTDS, "Silicon PIN Photodiodes - Visible Range," 2026. [Online]. Available: https://www.htds.fr/optoelectronique/detecteurs-optoelectroniques/photodiodes/photodiodes-vis/photodiodes-pin-silicium/. [Accessed 10 March 2026].

[16] R. Kashyap, Fiber Bragg Gratings, Academic Press, 2009, Oct.23, p. 632.

References

[17] R. G. Smith, "Optical power handling capacity of low loss optical fibers as determined by stimulated Raman and Brillouin scattering,"*Applied Optics,* vol. 11, no. 11, pp. 2489-2494, 1972.

[18] A. Shabaneh, "Investigative Modeling of Symmetric Fiber Bragg Grating as Dispersion Compensation for Optical Transmission System,"*Optica pura y aplicada,* vol. 53, no. 4, p. 7, 2020.

[19] S. a. Sekimoto, "A fiber-optic evanescent-wave hydrogen gas sensor using palladium-supported tungsten oxide,"*Sensors and Actuators B: Chemical,* vol. 66, no. 1-3, pp. 142-145, 2000.

[20] N. B. Chuan, A. Premadi, M. S. Ab-Rahman and K. Jumari, "Optical power budget and cost estimation for Intelligent Fiber-To-the-Home (i-FTTH)," in *International Conference on Photonics*, 2010, July.

[21] H. Li, H. Zhang, Y. Song, F. Meng and L. Zhu, "Dual-parameter sensing characteristics of a single fiber Bragg grating half-pasted by 1C-LV epoxy under different curing,"*Optica Applicata,* vol. 51, no. 3, 2021.

[22] M. Hamchaoui and S. Amara, *Etude d'un système FTTH (Fiber To The Home), Master Thesis,* UNIVERSITE AMIRA-BEJAIA, 2019.

[23] M. Berrah, *ÉTUDE ET SIMULATION d'un Réseau FTTH BASÉ SUR LA NORME G-PON,* Université Abderrahmane Mira - Bejaia, 2019-2020.

[24] H. E. Djafour and A. Kameche, *Study and Simulation of an Optical Fiber Transmission Chain,* Kasdi Merbah university-ouargla, 2024.

[25] F. Ujang; A. Anhar; N. V. Anggraini; M. Iqbal Alfajri; A. Al Nazen; T. Firmansyah , *Fiber Bragg Grating (FBG) With Post-Dispersion Compensation Scheme to Eliminate Dispersion Power Fading in Radio over Fiber (RoF) Systems*, 4th International Conference on Electrical Engineering and Informatics (ICon EEI),Pekanbaru, Indonesia2024.